XIEASY®

喜易珈工业组装技术有限公司

modular
Conveying system

工业安全
防护围栏手册

专注品质 · 专业服务

Absorption makes profession

Profession makes excellence

Excellence makes trust

机器人外防护系统
Robot Guard System

机器人外防护系统
Robot Guard System

生产线外防护系统
Guard system of production line

产品防护系统
Product protection System

生产线外防护系统
Guard system of production line

机器人外防护系统
Robot Guard System

生产线外防护系统
Guard system of production line

机器人外防护系统
Robot Guard System

生产线外防护系统
Guard system of production line

机器人外防护系统
Robot Guard System

生产线外防护系统
Guard system of production line

生产线外防护系统
Guard system of production line

机械防护系统介绍

Introduction of machine guard system

机械防护系统又叫铝合金工业围栏，由铝型材框架，配合丝网、亚克力板或PC板等组成，高度可做到2.5米（可根据需求定制尺寸）。

Introduction of machine guard system also known as aluminum industry fence, which consists of aluminum profile frame, wire mesh, acrylic board or PC board, etc, the height can reach 2.5 meters(you can customize the size according to your needs).

机械防护系统应用

Application of machine guard system

广泛用于自动化防护，车间隔离，汽车生产线升级改造等。

It is widely used in automatic protection, workshop isolation, automo bile production line upgrade and transformation, etc.

机械防护系统特点

Charateristic of machine guard system

◎ 全组合式设计，拆装方便，可根据需要做后期的调整改动。
Combinatorial design, easy to disassembly and assemble, can be adjusted according to your needs.

◎ 铝型材外边光洁美观，十分耐脏，维护简单。
The aluminum profile is smooth and beautiful in appearance, very resistant to dirt and easy to maintain.

◎ 铝型材表面经过磨砂氧化，性能稳定，使用20年依旧如新。
The surface of aluminum profile has been grinded and oxidized, and its performance is stable. It has been used for 20years as new as before.

◎ 铝型材围栏无需刷漆，更环保。
Aluminum profile fence does not need to paint, more environmentally friendly.

◎ 铝型材可重复使用，回收价值高。
Aluminum profiles can be reused with high recovery value.

机械防护系统作用

Function of machine guard system

◎ 在产品生产中随着对效率、质量、规范的要求越来越高。现代车间普遍引用5S管理法，铝型材围栏组装方便快捷，坚固稳定的特点被广泛用于车间分区管理，打造整齐，干净，高效的工作环境。
With the increasing requirements for efficiency,quality and specifications in product production,5s management method is widely used in modem workshops. The characteristics of alumunum fence assembly are convenient, fast and stable. It is widely used in workshop zoning management to create a neat, clean and efficient working environment.

◎ 车间生产中常常存在安全隐患，造成工人无谓的受伤，使生产停滞，如汽车生产线焊接时喷起的焊渣，误入生产区被机器撞伤等，加道铝型材隔离栏可大大提高生产的安全性。
There are often hidden safety hazards in workshop production, which cause unnecessary injuries to workers and stagnate production. For example, welding slag sprayed during welding of automobile production line, accidentally hit by the machine in the production area, and so on. Add-on aluminum profile isolation bar can greatly improve the safety of production.

◎ 越来越多的更智能自动化设备投入生产中，常常因为一些微小的疏忽，造成机器故障，昂贵的维修成本以及耽误的工期，让很多企业损失巨大，在机器外部加上铝型材防护罩，可大大降低故障风险，有效延长设备使用寿命。
More and more intelligent automation facilities are put into production, often due to some minor negligence, resulting in machine failure. Expensive maintenance costs and delayed construction time have caused huge losses to many enterprises. Adding aluminum profile protective cover outside the machine can greatly reduce the risk of failure and effectively prolong the service life of the equipment.

安全防护区域

Safety protection area

机械防护系统用于机械设备运行时对人员可能造成伤害危险的有效保护。机械防护系统所能防护的区域取决于防护单元的高度。如图所示（绿色阴影部分为安全防护区域）：防护单元以外200mm为安全防护区域。当防护单元高度2000mm时，其顶端仍有一小部分距离约为350mm的区域无法得到安全防护。当防护单元高度小于1400mm时，将无法起到安全防护的作用。

The mechanical protection system is used to protect the personnel against the danger of injury when the mechanical equipment is in operation. The area where the mechanical protection system can be protected depends on the height of the protection unit,as shown in the figure (Green Shadow section is security zone):the 200mm outside the protection unit is a security protection area.When the height of the guard unit is 2000mm,there is still a small part of the area at the top of guard unit that is about 350mm away from being protected. When the height of the guard unit is less than the 1400mm,It will not be able to function as a security guard.

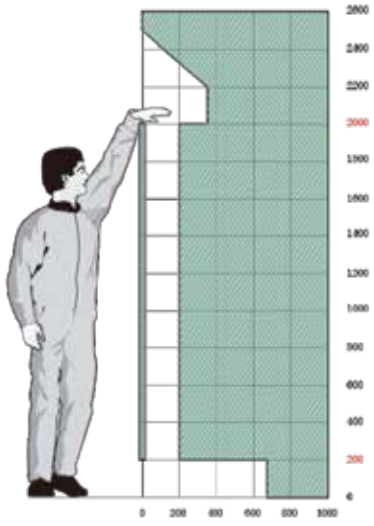

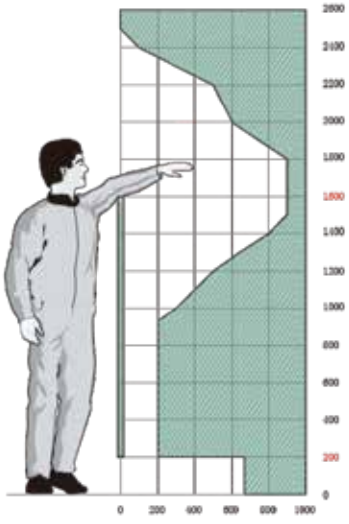

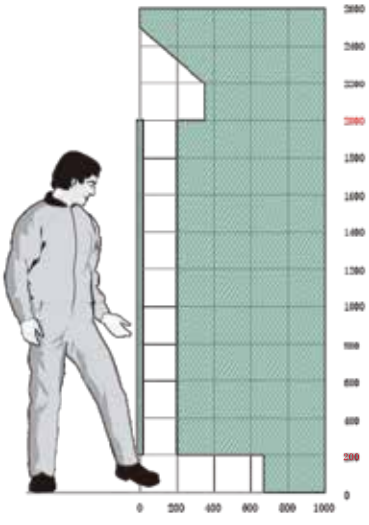

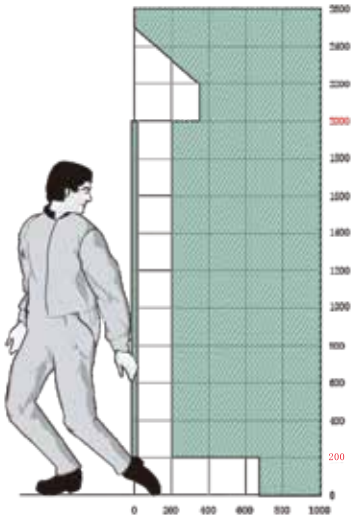

防护单元距离地面的高度200mm. 如图所示（绿色阴影部分为安全防护区域）：防护单元底部650mm的距离内无法得到安全防护。

The height of the protective unit from the ground is 200mm. As shown in the figure(the green shadow section is a security zone): the 650mm at the bottom of the guard unit is not protected within the distance

防护单元选型参考

Reference of Protective Unit Selection

防护单元以防护型材为框架型材。防护型材即可安装编织网、焊接网、又可安装有机玻璃、亚克力等板状物。安装板状物时需配合夹板弹片使用（建议间距为300mm）。

The protective unit takes protective profiles as frame profiles. Protective profiles can be installed with braided mesh welded mesh, plexiglass, acrylic and other plate-like materials. When installing plate, it is necessary to cooperate with splint shrapnel(recommended spacing is 300mm).

防护型材夹网
Protective Grille
Profile Inserting Mesh

防护型材夹网
Protective Grille Profile Inserting Mesh
40x40mm, Φ4 编织网
40x40mm, Φ4 woven mesh

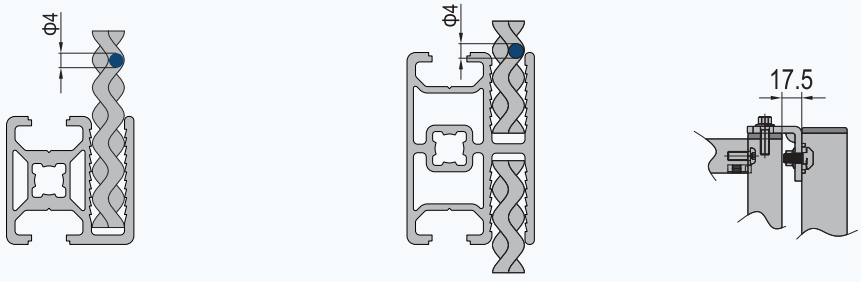

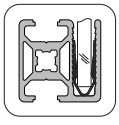

防护型材夹板
Protective Grille
Profile Inserting Panel

防护型材夹板
Protective Grille Profile Inserting Panel
板厚度范围3-5mm
3-5mm transparent PMMA panel
夹板弹片: 建议弹片间距300mm
Spring Clamping Nut: Recommended distance is 300mm

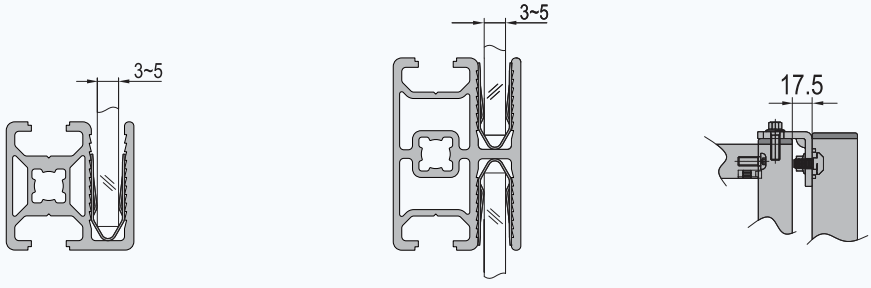

30系列A型
Pg30 TYPE A

01

编织网40x40 丝径Φ4/焊接网40x40 丝径Φ4
40x40 woven mesh wire diameterΦ4/40x40
weld mesh wire diameterΦ4

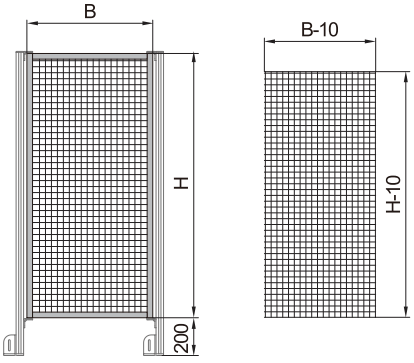

产品描述 Description	H (mm)	B (mm)	重量(kg) Mass	订购编号 Part No.
30系列-A型-01 PG30-TypeA-01	1400	425	6.5	PU.30.1400.0425.A.01
	1400	675	8.8	PU.30.1400.0675.A.01
	1400	925	11	PU.30.1400.0925.A.01
	1800	425	8.2	PU.30.1800.0425.A.01
	1800	675	10.9	PU.30.1800.0675.A.01
	1800	925	13.7	PU.30.1800.0925.A.01
	250-2300	250-1500		PU.30. H . B .A.01

02

4mm 透明亚克力板
4mm transparent acrylic plate

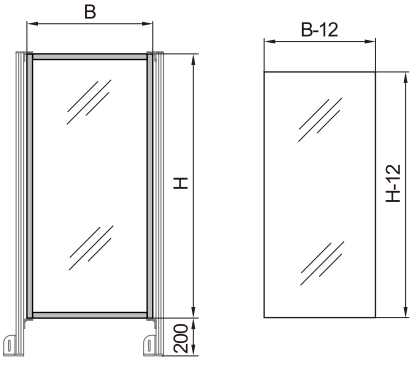

产品描述 Description	H (mm)	B (mm)	重量(kg) Mass	订购编号 Part No.
30系列-A型-02 PG30-TypeA-02	1400	425	6.5	PU.30.1400.0425.A.02
	1400	675	8.7	PU.30.1400.0675.A.02
	1400	925	10.8	PU.30.1400.0925.A.02
	1800	425	8.1	PU.30.1800.0425.A.02
	1800	675	10.7	PU.30.1800.0675.A.02
	1800	925	12.9	PU.30.1800.0925.A.02
	250-2300	250-1500		PU.30. H . B .A.02

订购编号解析/Item Number Reference:

标准颜色喷塑色号： RAL9006 RAL1018

现订购编号默认焊接网喷塑颜色为灰色 (RAL9006)，如需黑色 (RAL9005) 或黄色 (RAL1018) 等其他颜色，需在现订购编号后追加色号。
The part number is for weld mesh wire in the default configuration, please specify with RAL Code if other is required, such as RAL9005 for black, RAL 1018 for yellow.

EX:PU30.1400.0425.A.01-RAL9005

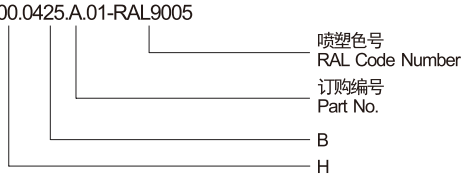

配套组件（需单独订购）
Associated kits（To be ordered separately):

立柱单元
Strut Elements ---------- Page 14-19

连接组件
Connecting Elements ---------- Page 20

30系列B型
Pg30 TYPE B

01

编织网40x40 丝径Φ4/焊接网40x40 丝径Φ4
40x40 woven mesh wire diameterΦ4/40x40
weld mesh wire diameterΦ4

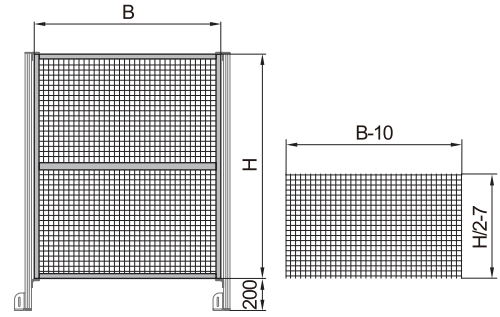

产品描述 Description	H (mm)	B (mm)	重量(kg) Mass	订购编号 Part No.
30系列-B型-01 PG30-TypeB-01	1400	1175	14.6	PU.30.1400.1175.B.01
	1800	1175	17.8	PU.30.1800.1175.B.01
	250-2300	250-2500		PU.30. H . B .B.01

02

4mm 透明亚克力板
4mm transparent acrylic plate

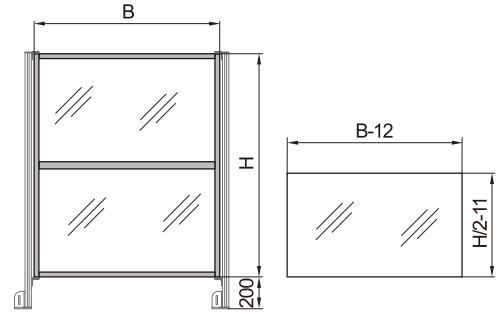

产品描述 Description	H (mm)	B (mm)	重量(kg) Mass	订购编号 Part No.
30系列-B型-02 PG30-TypeB-02	1400	1175	14.4	PU.30.1400.1175.B.02
	1800	1175	17.5	PU.30.1800.1175.B.02
	250-2300	250-2500		PU.30. H . B .B.02

订购编号解析/Item Number Reference:

标准颜色喷塑色号：

现订购编号默认焊接网喷塑颜色为灰色 (RAL9006)，如需黑色 (RAL9005) 或黄色 (RAL1018) 等其他颜色，需在现订购编号后追加色号。
The part number is for weld mesh wire in the default configuration, please specify with RAL Code if other is required, such as RAL9005 for black, RAL 1018 for yellow.

EX:PU30.1400.1170.B.01-RAL9005

- 喷塑色号 RAL Code Number
- 订购编号 Part No.
- B
- H

配套组件（需单独订购）
Associated kits（To be ordered separately):

立柱单元 Strut Elements ---------- Page 14-19

连接组件 Connecting Elements ---------- Page 20

30系列C型
Pg30 TYPE C

01

编织网40x40 丝径Φ4/焊接网40x40 丝径Φ4
40x40 woven mesh wire diameterΦ4/40x40
weld mesh wire diameterΦ4

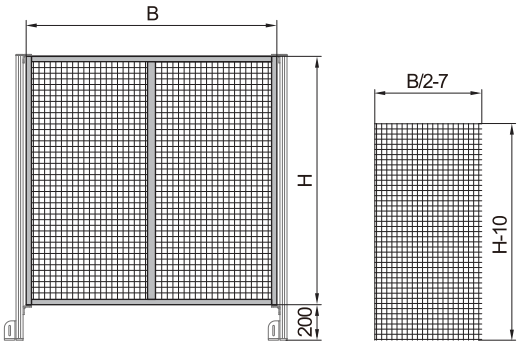

产品描述 Description	H (mm)	B (mm)	重量(kg) Mass	订购编号 Part No.
30系列-C型-01 PG30-TypeC-01	1400	1425	17.1	PU.30.1400.1425.C.01
	1800	1425	21.3	PU.30.1800.1425.C.01
	250-2300	500-3000		PU.30. H . B .C.01

02

4mm 透明亚克力板
4mm transparent acrylic plate

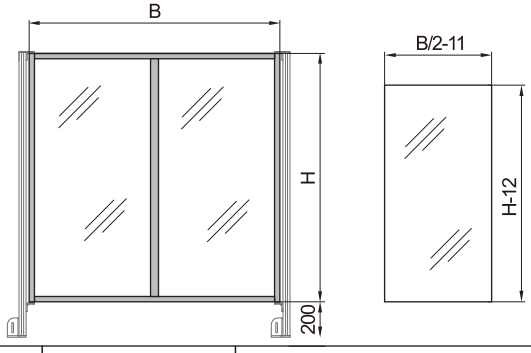

产品描述 Description	H (mm)	B (mm)	重量(kg) Mass	订购编号 Part No.
30系列-C型-02 PG30-TypeC-02	1400	1425	16.9	PU.30.1400.1425.C.02
	1800	1425	20.9	PU.30.1800.1425.C.02
	250-2300	500-3000		PU.30. H . B .C.02

订购编号解析/Item Number Reference:

标准颜色喷塑色号：

现订购编号默认焊接网喷塑颜色为灰色 (RAL9006)，如需黑色 (RAL9005) 或黄色 (RAL1018) 等其他颜色，需在现订购编号后追加色号。
The part number is for weld mesh wire in the default configuration, please specify with RAL Code if other is required, such as RAL9005 for black, RAL 1018 for yellow.

EX:PU30.1400.1425.C.01-RAL9005

- 喷塑色号 RAL Code Number
- 订购编号 Part No.
- B
- H

配套组件（需单独订购）
Associated kits（To be ordered separately):

立柱单元 Strut Elements ---------- Page 14-19

连接组件 Connecting Elements ---------- Page 20

40系列A型
Pg40 TYPE A

01

编织网40x40 丝径Φ4/焊接网40x40 丝径Φ4
40x40 woven mesh wire diameterΦ4/40x40
weld mesh wire diameterΦ4

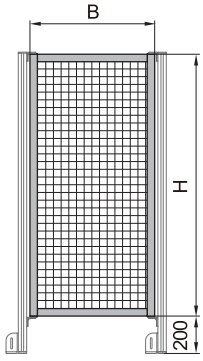

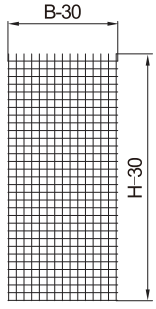

产品描述 Description	H (mm)	B (mm)	重量(kg) Mass	订购编号 Part No.
40系列-A型-01 PG40-TypeA-01	1400	420	8.3	PU.40.1400.0420.A.01
	1400	670	10.8	PU.40.1400.0670.A.01
	1400	920	13.4	PU.40.1400.0920.A.01
	1800	420	10.4	PU.40.1800.0420.A.01
	1800	670	13.4	PU.40.1800.0670.A.01
	1800	920	16.4	PU.40.1800.0920.A.01
	250-2300	250-1500		PU.40. H . B .A.01

02

4mm 透明亚克力板
4mm transparent acrylic plate

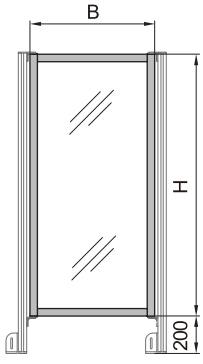

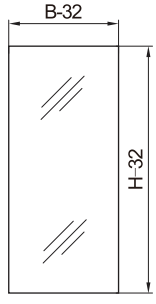

产品描述 Description	H (mm)	B (mm)	重量(kg) Mass	订购编号 Part No.
40系列-A型-02 PG40-TypeA-02	1400	420	8.3	PU.40.1400.0420.A.02
	1400	670	10.7	PU.40.1400.0670.A.02
	1400	920	13.2	PU.40.1400.0920.A.02
	1800	420	10.3	PU.40.1800.0420.A.02
	1800	670	12.5	PU.40.1800.0670.A.02
	1800	920	16.2	PU.40.1800.0920.A.02
	250-2300	250-1500		PU.40. H . B .A.02

订购编号解析/Item Number Reference:

标准颜色喷塑色号：

现订购编号默认焊接网喷塑颜色为灰色 (RAL9006)，如需黑色 (RAL9005) 或黄色 (RAL1018) 等其他颜色，需在现订购编号后追加色号。
The part number is for weld mesh wire in the default configuration, please specify with RAL Code if other is required, such as RAL9005 for black, RAL 1018 for yellow.

EX:PU40.1400.0420.A.01-RAL9005

- 喷塑色号 RAL Code Number
- 订购编号 Part No.
- B
- H

配套组件（需单独订购）
Associated kits（To be ordered separately):

立柱单元 Strut Elements ---------- Page 14-19

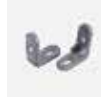

连接组件 Connecting Elements ---------- Page 20

40系列B型
Pg40 TYPE B

01

编织网40x40 丝径Φ4/焊接网40x40 丝径Φ4
40x40 woven mesh wire diameterΦ4/40x40
weld mesh wire diameterΦ4

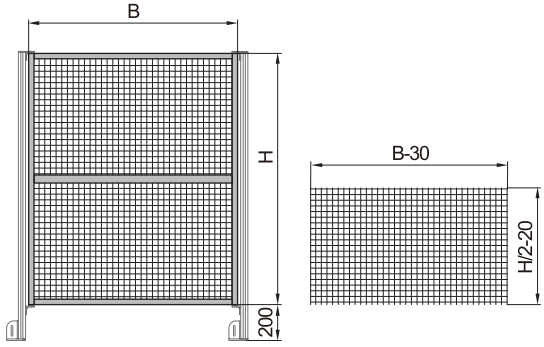

产品描述 Description	H (mm)	B (mm)	重量(kg) Mass	订购编号 Part No.
40系列-B型-01 PG40-TypeB-01	1400	1170	18.1	PU.40.1400.1170.B.01
	1800	1170	21.6	PU.40.1800.1170.B.01
	500-2300	250-2500		PU.40. H . B .B.01

02

4mm 透明亚克力板
4mm transparent acrylic plate

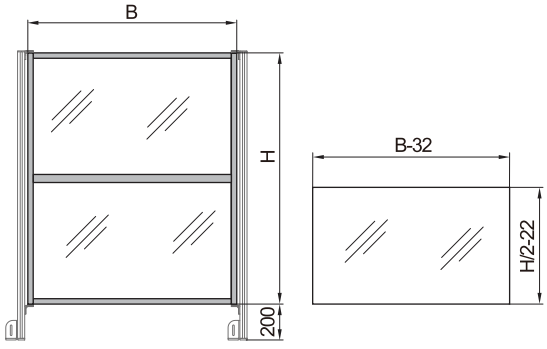

产品描述 Description	H (mm)	B (mm)	重量(kg) Mass	订购编号 Part No.
40系列-B型-02 PG40-TypeB-02	1400	1170	17.9	PU.40.1400.1170.B.02
	1800	1170	23.4	PU.40.1800.1170.B.02
	500-2300	250-2500		PU.40. H . B .B.02

订购编号解析/Item Number Reference:

标准颜色喷塑色号：

现订购编号默认焊接网喷塑颜色为灰色 (RAL9006)，如需黑色 (RAL9005) 或黄色 (RAL1018) 等其他颜色，需在现订购编号后追加色号。
The part number is for weld mesh wire in the default configuration, please specify with RAL Code if other is required, such as RAL9005 for black, RAL 1018 for yellow.

EX:PU40.1400.1170.B.01-RAL9005

- 喷塑色号 RAL Code Number
- 订购编号 Part No.
- B
- H

配套组件（需单独订购）
Associated kits（To be ordered separately):

立柱单元 Strut Elements ---------- Page 14-19

连接组件 Connecting Elements ---------- Page 20

40系列C型
Pg40 TYPE C

01

编织网40x40 丝径Φ4/焊接网40x40 丝径Φ4
40x40 woven mesh wire diameterΦ4/40x40
weld mesh wire diameterΦ4

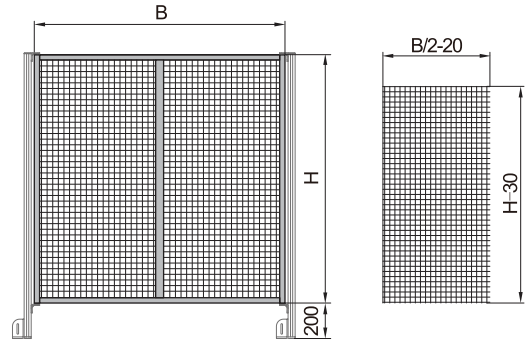

产品描述 Description	H (mm)	B (mm)	重量（kg） Mass	订购编号 Part No.
40系列-C型-01 PG40-TypeC-01	1400	1420	21	PU.40.1400.1420.C.01
	1800	1420	25.9	PU.40.1800.1420.C.01
	250-2300	500-3000		PU.40. H . B .C.01

02

4mm 透明亚克力板
4mm transparent acrylic plate

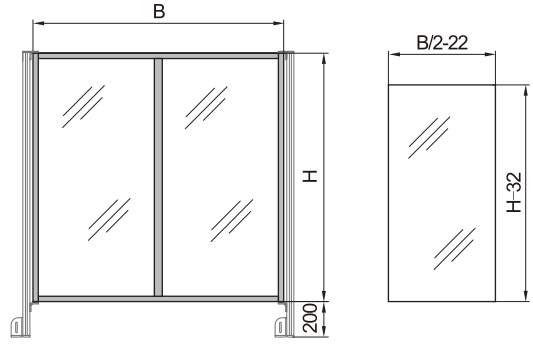

产品描述 Description	H (mm)	B (mm)	重量（kg） Mass	订购编号 Part No.
40系列-C型-02 PG40-TypeC-02	1400	1420	20.8	PU.40.1400.1420.C.02
	1800	1420	25.5	PU.40.1800.1420.C.02
	250-2300	500-3000		PU.40. H . B .C.02

订购编号解析/Item Number Reference:

标准颜色喷塑色号：

现订购编号默认焊接网喷塑颜色为灰色 (RAL9006)，如需黑色 (RAL9005) 或黄色 (RAL1018) 等其他颜色，需在现订购编号后追加色号。
The part number is for weld mesh wire in the default configuration, please specify with RAL Code if other is required, such as RAL9005 for black, RAL 1018 for yellow.

EX:PU40.1400.1420.C.01-RAL9005

- 喷塑色号 RAL Code Number
- 订购编号 Part No.
- B
- H

配套组件（需单独订购）
Associated kits（To be ordered separately):

立柱单元 Strut Elements ---------- Page 14-19

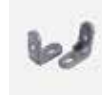

连接组件 Connecting Elements ---------- Page 20

防护型材

Protective Grille Profile

防护单元以防护型材为框架型材。防护型材既可安装编织网、焊接网、又可安装有机玻璃、亚克力等板状物。安装板状物时需要配合夹板弹片使用（建议间距为300mm）

The protective unit takes protective profiles as frame profiles. Protective profiles can be installed with braided mesh welded mesh, plexiglass, acrylic and other plate-like materials. When in installing plate, it is necessary to cooperate with splint shrapnel (recommended spacing is 300mm)

30x30 1槽
30x30 1Grillre slot

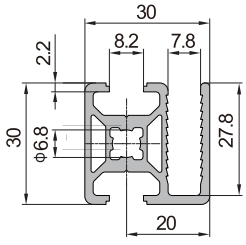

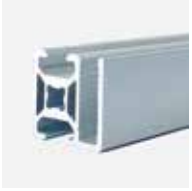

30x45 2槽
30x45 2Grillre slots

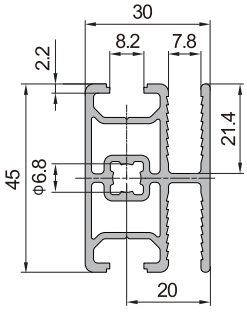

40x40 1槽
40x40 1Grillre slot

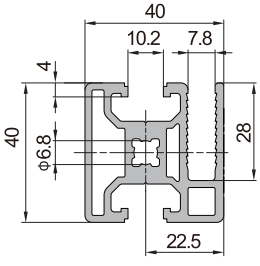

40x60 2槽
40x60 2Grillre slots

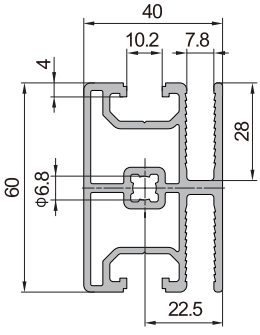

产品描述 Description	惯性矩Ix (cm^4) Moment of Inertia	惯性矩Iy (cm^4) Moment of Inertia	弯矩Wx (cm^3) Moment of Resistance	弯矩Wy (cm^3) Moment of Resistance	重量 Mass (kg/m)	订购编号 Part No.
PG30 30X30 1 GRILLE SLOT	3.16	2.42	2.1	1.6	0.87	PU.01.30.3030.01
PG30 30X45 2 GRILLE SLOTS	6.8	4.3	4.5	1.9	1.15	PU.01.30.3045.02
PG40 40X40 1 GRILLE SLOT	9.84	8.1	4.92	4.05	1.65	PU.01.40.4040.01
PG40 40X60 2 GRILLE SLOTS	22.9	13.2	11.45	4.4	2.0	PU.01.40.4060.02

螺栓连接件
Bolt Connector

连接方式更简单便捷
Connection is simpler and more convenient.
材质：碳钢镀锌
Material:galvanized carbon steel

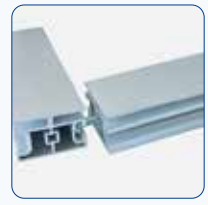

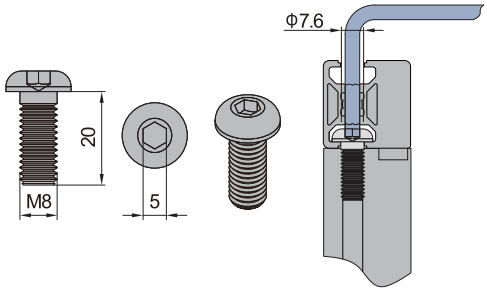

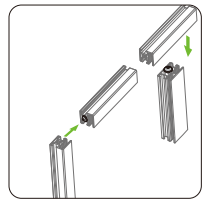

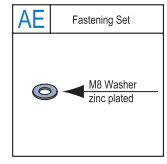

产品描述 Description	紧固组件 Fastening Set	重量（g） Mass	订购编号 Part No.
螺栓连接件-30系列 Bolt Connector-PG30		10	MG.02.08.M8
螺栓连接件-40系列 Bolt Connector-PG40	1xAE	12	MG.02.08.M8.ST

防扭后置螺母
Anti-torsion Subsequent Nut

防扭后置螺母用于防止型材之间安装时或受外力时的扭转。
Anti-torsion rear nut is used to prevent torsion between profiles when installed or subjected to external forces.
材质：碳钢镀镍
Material:Nickel plated carbon steel

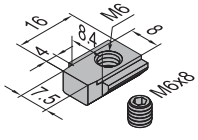

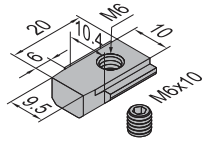

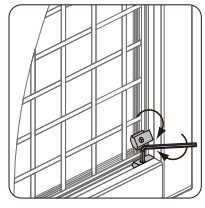

产品描述 Description	重量（g） Mass	订购编号 Part No.
8槽防扭后置螺母（含凹端顶丝） Anti-torsional Subsequent Nut-8(with top thread)	10	B.05.08.M6
10槽防扭后置螺母（含凹端顶丝） Anti-torsional Subsequent Nut-10(with top thread)	15	B.05.10.M6

夹板弹片

Spring Clamping Nut

安装板状物时需配合夹板弹片使用，建议夹板弹片安装距离为300mm.

Spring clamping nut has to be used when inserting panelsand recommend installing distance is 300mm.

材质：优质弹簧钢

Material: spring steel

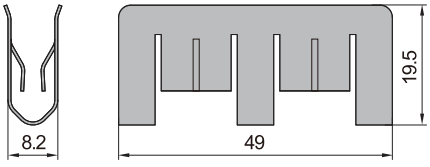

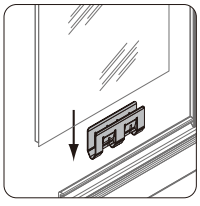

产品描述 Description	重量(g) Mass	订购编号 Part No.
夹板弹片Spring Clamping Nut	7	MG.02.01

防护型材端盖

End Cap for Protective Grille Profile

端盖可以预防划伤，使型材更美观；中心孔用于实现型材于螺栓的连接。

To prevent injury and improve end appearance, the borehole enables assembly of profile and connectors.

材质：ABS 颜色：黑色

Material:ABS Color:Black

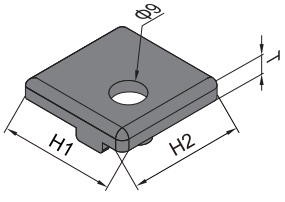

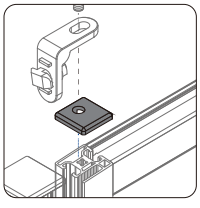

产品描述 Description	H1 (mm)	H2 (mm)	T (mm)	重量(g) Mass	订购编号 Part No.
防护型材端盖-30系列-3030 End Cap for Protective Grille Profile-PG30-3030	30	30	5	4	MG.02.02.01
防护型材端盖-40系列-4040 End Cap for Protective Grille Profile-PG40-4040	40	40	5	6	MG.02.02.02

立柱单元
Strut Elements

30系列防护单元：当H=1400时，建议选用40x40立柱型材；当H=1800时，建议选用40x80专用立柱型材
Pg30 machine guard unit:H=1400mm,PG40 40x40 strut profile recommended;
H=1800mm,special PG40 40x80 profile for strut elements recommended;
40系列防护单元：当H=1400时，建议选用45x45立柱型材；当H=1800时，建议选用45x90专用立柱型材
Pg40 machine guard unit:H=1400mm,PG45 45x45strut profile recommended;
H=1800mm,special PG45 45x90 profile for strut elements recommended;

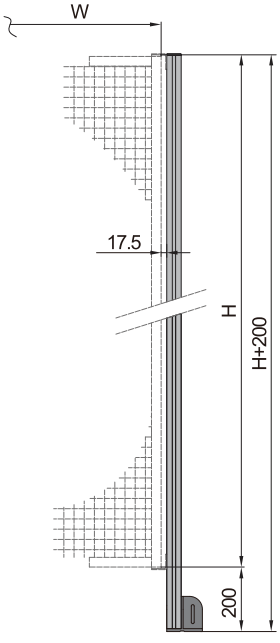

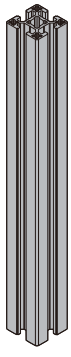

Page15

+

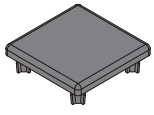

Page16

+

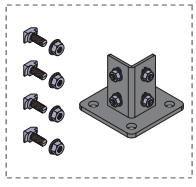

Page17-19

=

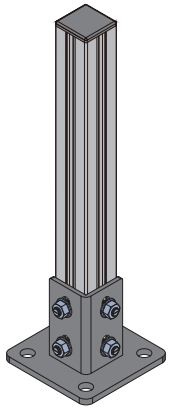

产品描述 Description	立柱型材 Strut Profile	H (mm)	订购编号 Part No.
立柱单元H1400 Strut ElementsH1400	40X40	1400	MG.H1400.4040.ST
	40X80	1400	MG.H1400.4080.ST
	45X45	1400	MG.H1400.4545.ST
	45X90	1400	MG.H1400.4590.ST
立柱单元H1800 Strut ElementsH1800	40X40	1800	MG.H1800.4040.ST
	40X80	1800	MG.H1800.4080.ST
	45X45	1800	MG.H1800.4545.ST
	45X90	1800	MG.H1800.4590.ST

防护立柱型材
Profile for strut elements

40系列40x40 4槽
Pg40 40X40 4slots

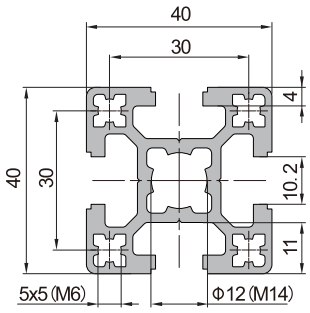

40系列40x80 6槽
Pg40 40X80 6slots

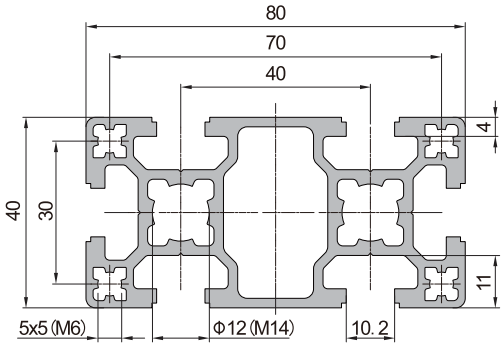

45系列45x45 4槽
Pg40 45X45 4slots

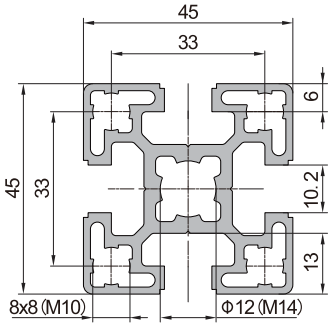

45系列45x90 6槽
Pg45 45X90 6slots

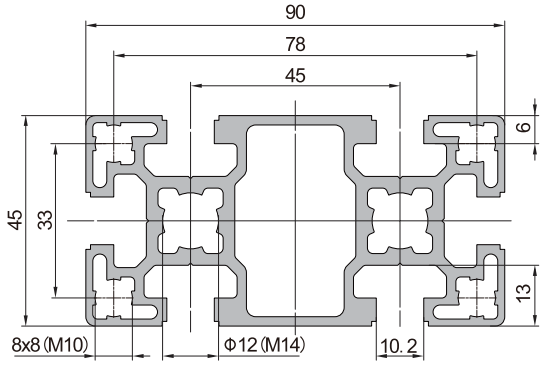

产品描述 Description	惯性矩Ix(cm^4) Moment of Inertia	惯性矩Iy(cm^4) Moment of Inertia	弯矩Wx(cm^3) Moment of Resistance	弯矩Wy(cm^3) Moment of Resistance	重量(kg/m) Mass	订购编号 Part No.
PG40 40X40 4 SLOTS	9.2	9.2	4.6	4.6	1.0	A.01.10.4040.04
PG40 40X80 6 SLOTS	16.6	63.2	8.3	15.8	2.7	A.01.10.4080.06
PG45 45X45 4 SLOTS	12.37	12.37	5.94	5.94	1.78	A.01.10.4545.04
PG45 45X90 6 SLOTS	24.5	91.9	10.9	20.4	3.17	A.01.10.4590.06

端盖
End Cap

端盖可以预防划伤，使型材更美观。
End cover can prevent scratches, improve profile end appearance.
材质：ABS 颜色：黑色
Material: ABS Color:black

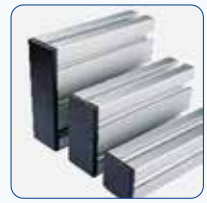

A型
Type A

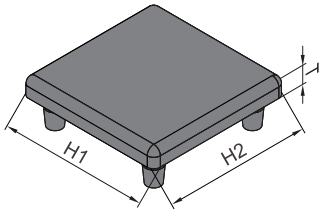

B型
Type B

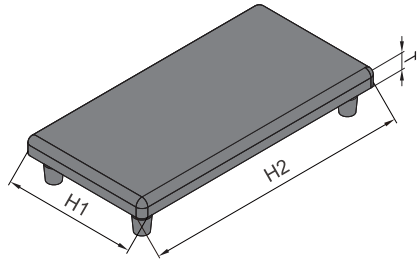

	产品描述 Description	H1 (mm)	H2 (mm)	T (mm)	重量(g) Mass	订购编号 Part No.
A型 Type A	端盖-40系列-4040 End Cap-PG40-4040	40	40	5	6	D.01.40.4040
	端盖-45系列-4545 End Cap-PG45-4545	45	45	5	8	D.01.45.4545
B型 Type B	端盖-40系列-4080 End Cap-PG40-4080	40	80	5	13	D.01.40.4080
	端盖-45系列-4590 End Cap-PG45-4590	45	90	5	16	D.01.45.4590

隔断支脚

Base Plate

隔断支脚用于防护单元之间型材的底部支撑，使用膨胀螺栓置于地下更能提高稳定性。

To support strut profile at the bottom.Expansion bolts chocked into floor can offer a high stability.

材质：铸钢 表面处理：黑色电泳

Material : cast steel Surface treatment: black electrophoresis

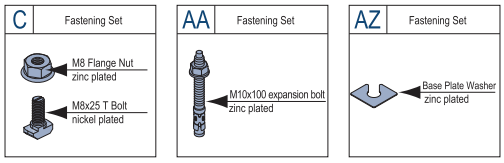

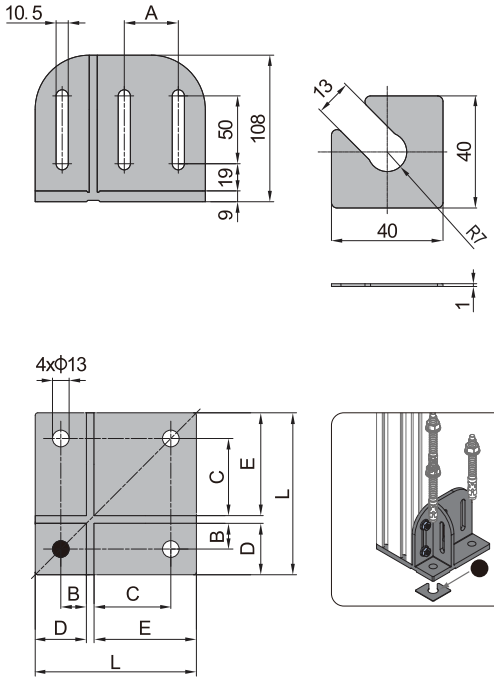

隔断支脚 4080
Base Plate 4080

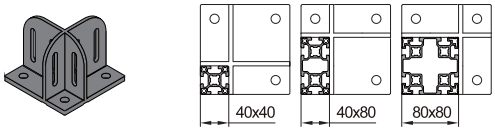

隔断支脚 4560
Base Plate 4560

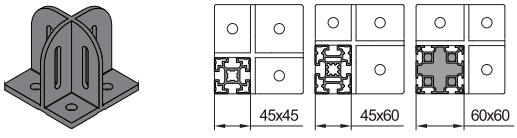

隔断支脚 4590
Base Plate 4590

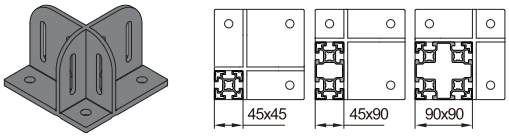

产品描述 Description	L (mm)	A (mm)	B (mm)	C (mm)	D (mm)	E (mm)	紧固组件 Fastening Set	重量(g) Mass	订购编号 Part No.
隔断支脚-4080（单个供货）/Base Plate-4080（pcs）	126	40	20	60	40	80	2XAZ	1930	E.01.4080
隔断支脚-4080（成套供货A）/Base Plate-4080（setA）	126	40	20	60	40	80	4XC+3XAA+2XAZ	2240	E.01.4080.STA
隔断支脚-4080（成套供货B）/Base Plate-4080（setB）	126	40	20	60	40	80	6XC+3XAA+2XAZ	2290	E.01.4080.STB
隔断支脚-4080（成套供货C）/Base Plate-4080（setC）	126	40	20	60	40	80	8XC+3XAA+2XAZ	2340	E.01.4080.STC
隔断支脚-4560（单个供货）/Base Plate-4560（pcs）	111		22.5	30	45	60	2XAZ	1600	E.01.4560
隔断支脚-4560（成套供货）/Base Plate-4560（set）	111		22.5	30	45	60	4XC+3XAA+2XAZ	1910	E.01.4560.ST
隔断支脚-4590（单个供货）/Base Plate-4590（pcs）	141	45	22.5	67.5	45	90	2XAZ	2330	E.01.4590
隔断支脚-4590（成套供货A）/Base Plate-4590（setA）	141	45	22.5	67.5	45	90	4XC+3XAA+2XAZ	2640	E.01.4590.STA
隔断支脚-4590（成套供货B）/Base Plate-4590（setB）	141	45	22.5	67.5	45	90	6XC+3XAA+2XAZ	2690	E.01.4590.STB
隔断支脚-4590（成套供货C）/Base Plate-4590（setC）	141	45	22.5	67.5	45	90	8XC+3XAA+2XAZ	2740	E.01.4590.STC
隔断支脚垫片 / Base Plate Gasket A								9	E.01.01

隔断支脚
Base Plate

隔断支脚用于防护单元之间型材的底部支撑，使用膨胀螺栓置于地下更能提高稳定性。
To support strut profile at the bottom.Expansion bolts chocked into floor can offer a high stability.
材质：碳钢 表面处理：黑色电泳
Material and Color: carbon steel, black electrophoresis

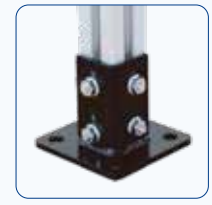

● 隔断支脚垫片
Base Plate Gasker
隔断支脚垫片用于地面不平，调整型材与地面垂直度。
To adjust the degree of vertical profile and uneven groud.

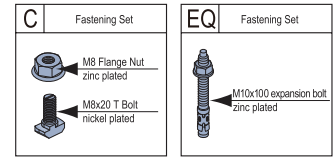

隔断支脚 40x40/45x45
Base Plate 40x40/45x45

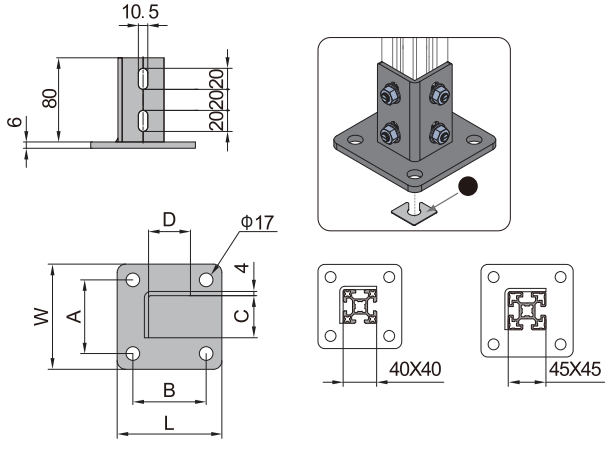

隔断支脚 40x80/45x90
Base Plate 40x80/45x90

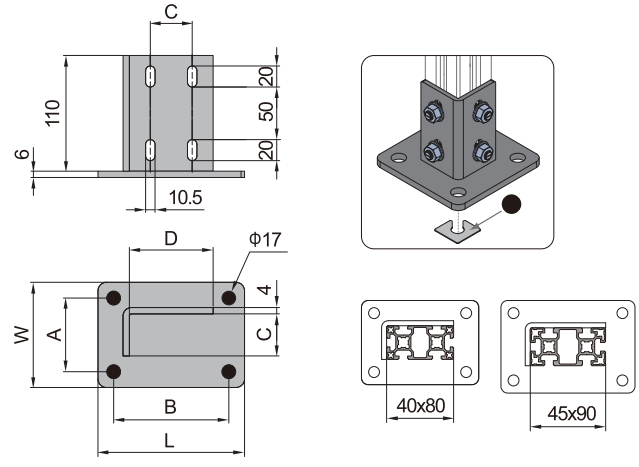

产品描述 Description	L (mm)	W (mm)	A (mm)	B (mm)	C (mm)	D (mm)	紧固组件 Fastening Set	重量(g) Mass	订购编号 Part No.
隔断支脚-4040(单个供货) Base Plate-4040（pcs)	100	100	70	70	40	40		629	E.02.4040
隔断支脚-4040(成套供货) Base Plate-4040（set)	100	100	70	70	40	40	4XC+4XEQ	1275	E.02.4040.ST
隔断支脚-4545(单个供货) Base Plate-4545（pcs)	110	110	80	80	45	45		1022	E.02.4545
隔断支脚-4545(成套供货) Base Plate-4545（set)	110	110	80	80	45	45	4XC+4XEQ	1710	E02.4545.ST
隔断支脚-4080(单个供货) Base Plate-4080（pcs)	140	100	70	110	40	80		753	E.02.4080
隔断支脚-4080(成套供货) Base Plate-4080（set)	140	100	70	110	40	80	6XC+4XEQ	1400	E.02.4080.ST
隔断支脚-4590(单个供货) Base Plate-4590（pcs)	160	110	80	130	45	90		1243	E02.4590
隔断支脚-4590(成套供货) Base Plate-4590（set)	160	110	80	130	45	90	6XC+4XEQ	1920	E.02.4590.ST
隔断支脚垫片 / Base Plate Gasket A								9	E.01.01

L形支脚

L Base

L形支脚可将型材紧固于地面上，并可调节型材距离地面的高度。
Lbase is to fix the profile on the floor and adjust the height of the profile to the floor.
材质：压铸铝合金 表面处理：黑色电泳
Material:diecast aluminum,black electrophoresis

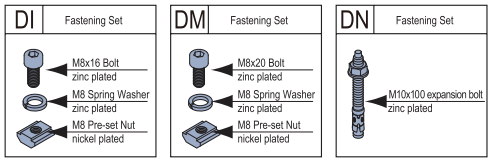

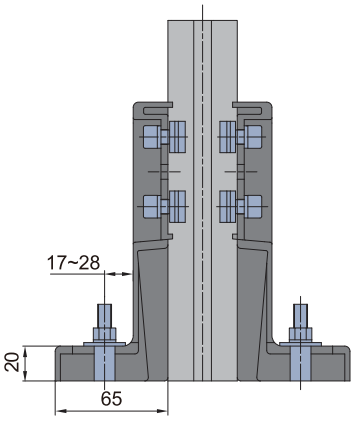

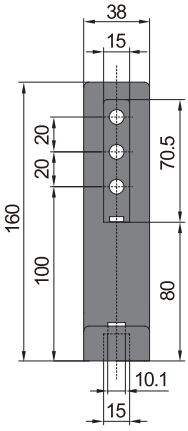

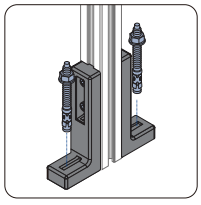

产品描述 Description	紧固组件 Fastening Set	重量(g) Mass	订购编号 Part No.
L形支脚（单个供货）LBase(pcs)		236	E.13.10
L形支脚-40系列（成套供货）LBase-FG40(set)	2XDI+1XDN	303	E.13.10.04.ST
L形支脚-45系列（成套供货）LBase-FG45(set)	2XDM+1XDN	306	E.13.10.06.ST

连接组件

Connectiong Element

用于防护单元与立柱单元的连接。
Connection between protection unit and strut unit.
材质：压铸锌
Material:Die cast zinc.

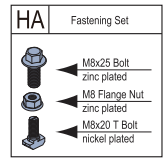

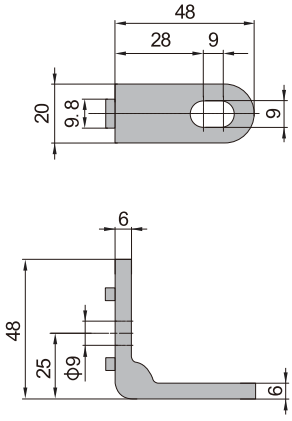

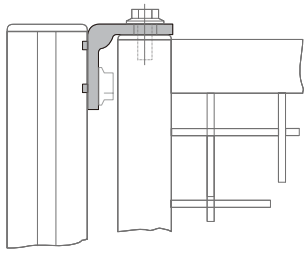

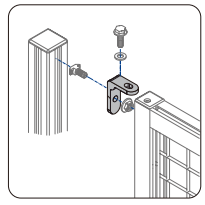

产品描述 Description	紧固组件 Fastening Set	重量(g) Mass	订购编号 Part No.
连接组件-防护单元 Connectiong Element for Protective Grille Unit	1XHA	96	MG.02.03.01

平开门-经济型-A
Swing Door-Economical

01 编织网40x40 丝径Ø4
40x40 woven mesh Ø4 diameter

02 4mm 透明亚克力板
4mm transparent acrylic plate

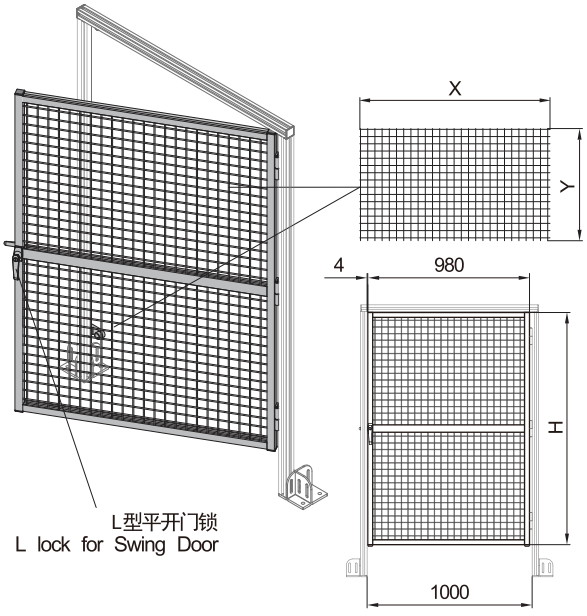

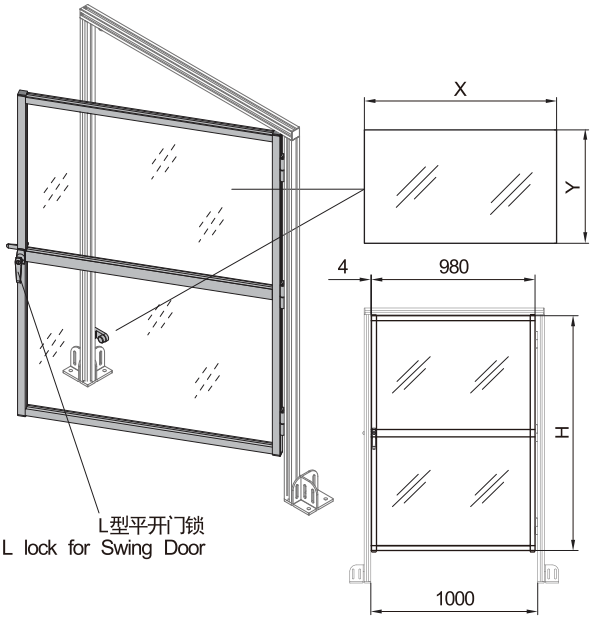

描述 Description	H (mm)	X (mm)	Y (mm)	重量(kg) Mass	订购编号（右开） Part No. (R)	订购编号（左开） Part No. (L)
防护单元-经济型-30系列-01 Protective Grille Unit-Economical-PG30-01	1400	970	693	16.2	PU.301400.01.A.R	PU.301400.01.A.L
	1800	970	893	17.5	PU.301800.01.A.R	PU.301800.01.A.L
防护单元-经济型-30系列-02 Protective Grille Unit-Economical-PG30-02	1400	968	689	16	PU.301400.02.A.R	PU.301400.02.A.L
	1800	968	889	17.3	PU.301800.02.A.R	PU.301800.02.A.L
防护单元-经济型-40系列-01 Protective Grille Unit-Economical-PG40-01	1400	950	680	18.4	PU.401400.01.A.R	PU.401400.01.A.L
	1800	950	880	21.5	PU.401800.01.A.R	PU.401800.01.A.L
防护单元-经济型-40系列-02 Protective Grille Unit-Economical-PG40-02	1400	948	678	18.3	PU.401400.02.A.R	PU.401400.02.A.L
	1800	948	878	21.3	PU.401800.02.A.R	PU.401800.02.A.L

订购编号解析/Item Number Reference:

标准颜色喷塑色号：

现订购编号默认焊接网喷塑颜色为灰色 (RAL9006)，如需黑色 (RAL9005) 或黄色 (RAL1018) 等其他颜色，需在现订购编号后追加色号。
The part number is for weld mesh wire in the default configuration, please specify with RAL Code if other is required, such as RAL9005 for black, RAL 1018 for yellow.

EX:PU.301400.01.A.R-RAL9005

喷塑色号
RAL Code Number

订购编号
Part No.

配套组件（需单独订购）
Associated kits（To be ordered separately):

立柱单元（两侧的立柱型材需一端攻丝M14x30）
Strut Elements(One end of strut profile need to be tapping M14x30 screw) - - - - - - - Page 14-19

闭门器（如需实现自动关闭功能，可选用闭门器）
Door Shutter(One end of strut profile need to be tapping M14x30 screw) - - - - - - - Page 35

防护单元平开门-B
Swing Door for Protective Grille Unit

01
编织网40x40 丝径Ø4
40x40 woven mesh Ø4 diameter

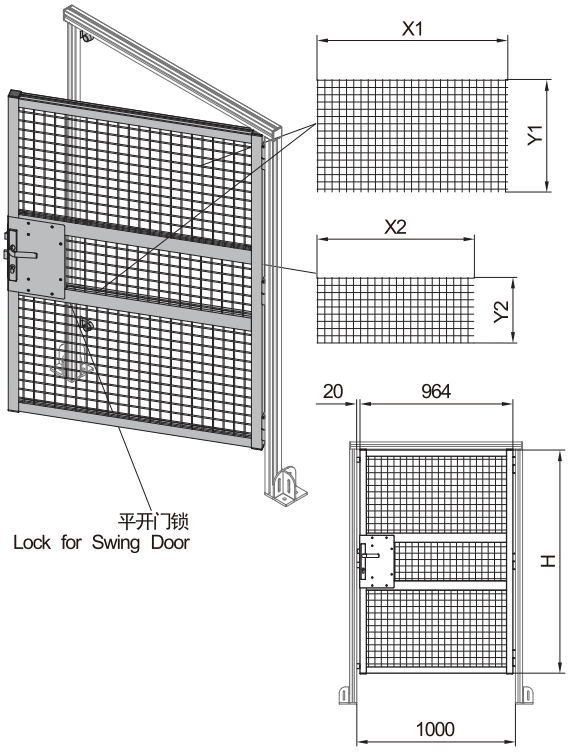

02
4mm 透明亚克力板
4mm transparent acrylic plate

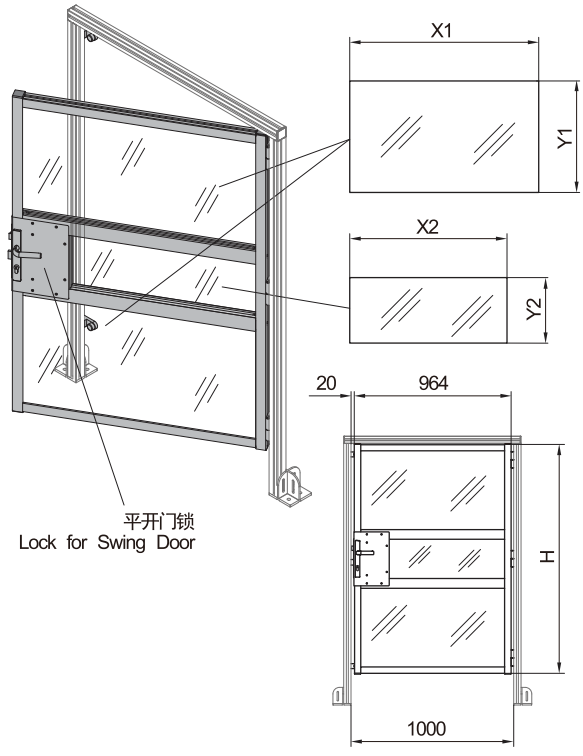

描述 Description	H (mm)	X1 (mm)	Y1 (mm)	X2 (mm)	Y2 (mm)	重量(kg) Mass	订购编号（右开） Part No. (R)	订购编号（左开） Part No. (L)
防护单元-30系列-01 Protective Grille Unit-PG30-01	1400	954	543	769	295	22.5	PU.301400.01.B.R	PU.301400.01.B.L
	1800	954	743	769	295	25.7	PU.301800.01.B.R	PU.301800.01.B.L
防护单元-30系列-02 Protective Grille Unit-PG30-02	1400	952	539	767	290	22.4	PU.301400.02.B.R	PU.301400.02.B.L
	1800	952	739	767	290	25.5	PU.301800.02.B.R	PU.301800.02.B.L
防护单元-40系列-01 Protective Grille Unit-PG40-01	1400	934	530	754	290	24.7	PU.401400.01.B.R	PU.401400.01.B.L
	1800	934	730	754	290	27.8	PU.401800.01.B.R	PU.401800.01.B.L
防护单元-40系列-02 Protective Grille Unit-PG40-02	1400	932	528	752	288	24.6	PU.401400.02.B.R	PU.401400.02.B.L
	1800	932	728	752	288	27.7	PU.401800.02.B.R	PU.401800.02.B.L

订购编号解析/Item Number Reference:

标准颜色喷塑色号： RAL9006 RAL1018

现订购编号默认焊接网喷塑颜色为灰色 (RAL9006)，如需黑色 (RAL9005) 或黄色 (RAL1018) 等其他颜色，需在现订购编号后追加色号。
The part number is for weld mesh wire in the default configuration, please specify with RAL Code if other is required, such as RAL9005 for black, RAL 1018 for yellow.

EX:PU.301400.01.B.R-RAL9005

喷塑色号
RAL Code Number

订购编号
Part No.

配套组件（需单独订购）
Associated kits（To be ordered separately):

立柱单元（两侧的立柱型材需一端攻丝M14x30）
Strut Elements(One end of strut profile need to be tapping M14x30 screw) - - - - - - - Page 14-19

闭门器（如需实现自动关闭功能，可选用闭门器）
Door Shutter(One end of strut profile need to be tapping M14x30 screw) - - - - - - - Page 35

平开门组件
Components for Swing Door

平开门组件一般由（如图所示）01、02、03、04四部分组成。
01、02、 03 and 04 as shown in the below figure.

防护单元平开门-经济型
Swing Door for Protective Grille Unit-Economical

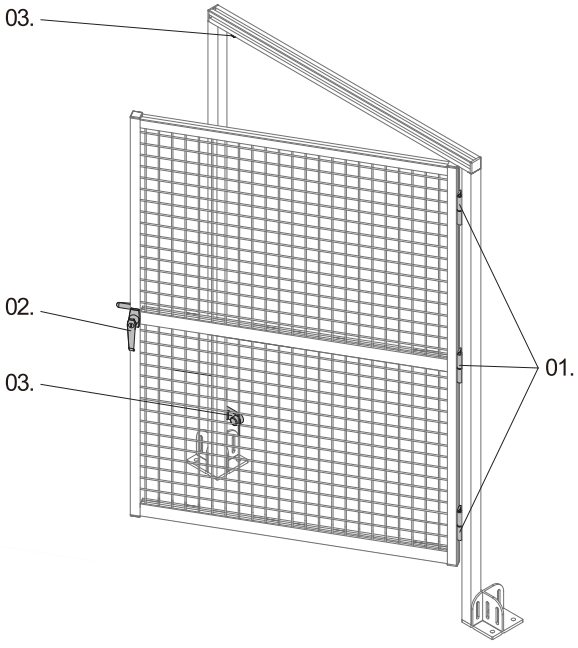

防护单元平开门
Swing Door for Protective Grille Unit

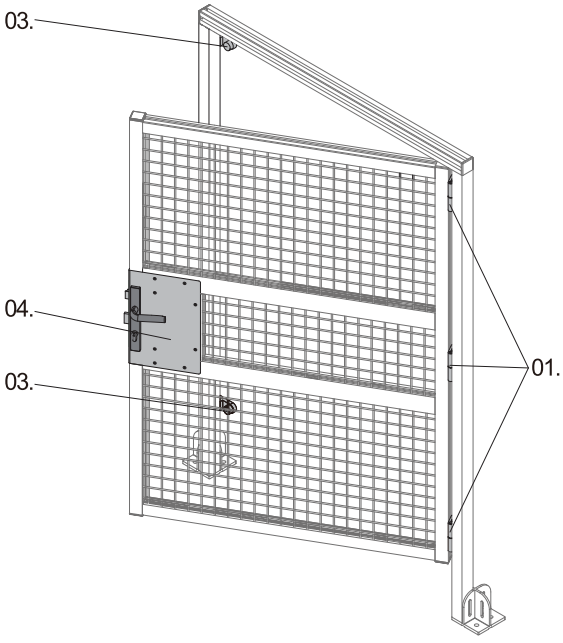

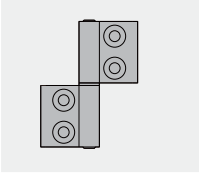

01. 插拔合页
ALRemovablle Hinge

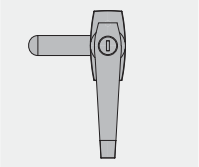

02. L型平开门锁
L lock for Swing Door

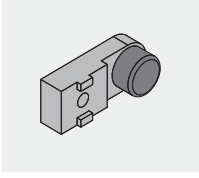

03. 平开门缓冲块
Buffer Block For Swing Door

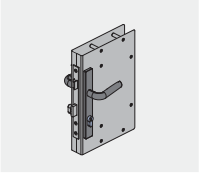

04. 平开门锁
Lock for Swing Door

插拔合页

ALRemovablle Hinge

材质：锌合金 表面处理：光亮氧化

Material and Color: aluminum alloy, natural anodized.

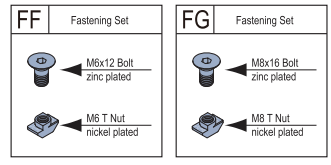

插拔合页-左开
Al Removablle Hinge-L

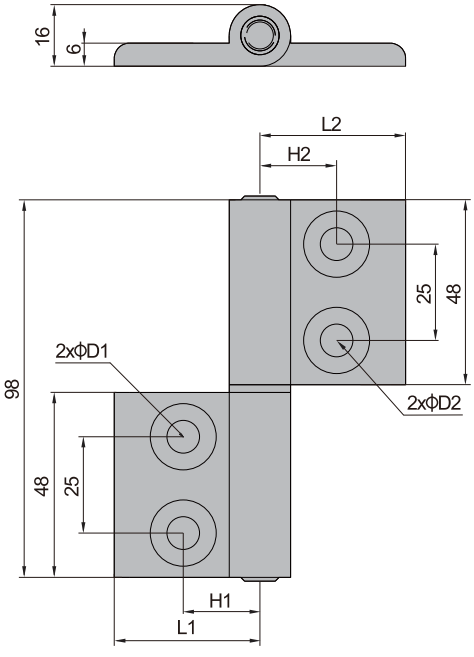

插拔合页-右开
Al Removablle Hinge-R

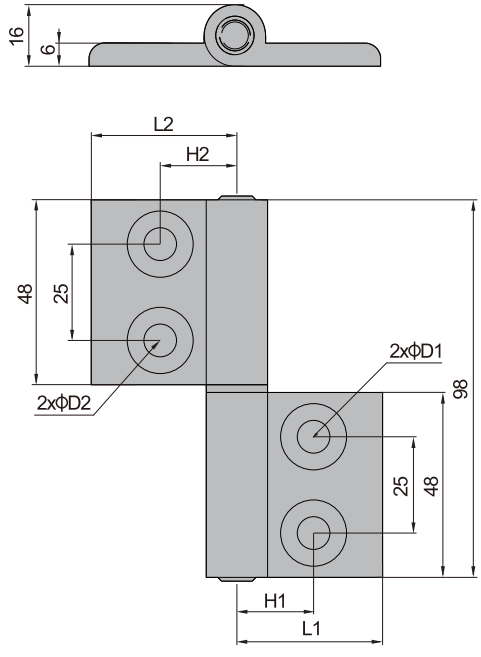

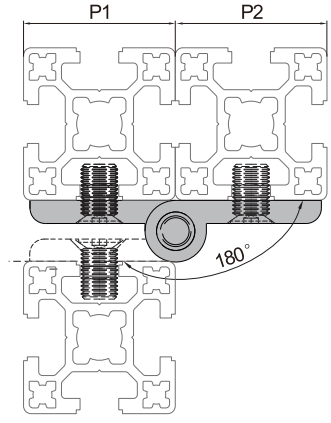

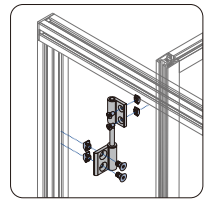

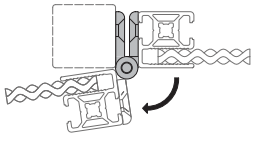

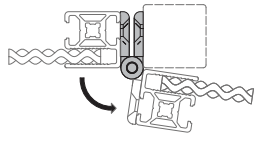

产品描述 Description	H1 (mm)	H2 (mm)	L1 (mm)	L2 (mm)	D1 (mm)	D2 (mm)	紧固组件 Fastening Set	重量(g) Mass	订购编号（左） Part No.（L）	订购编号（右） Part No.（R）
防护单元-30/40（成套供货） Protective Grille Unit-30/40(set)	20	20	28	38	6.5	8.5	2XFF+2XFG	158	G.08.30.40.ST	G.09.30.40.ST
防护单元-45/45（成套供货） Protective Grille Unit-45/45(set)	22.5	22.5	38	38	8.5	8.5	4XFG	186	G.08.45.45.ST	G.09.45.45.ST

L型平开门锁

L lock for Swing Door

材质：锌合金 表面处理：光面

Material and Color: zinc alloy, polish finsh.

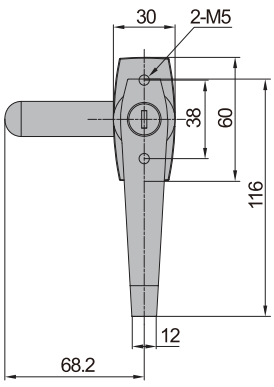

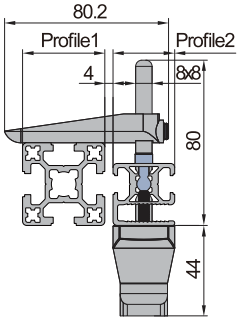

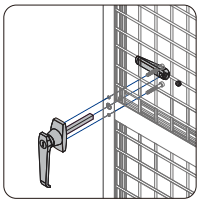

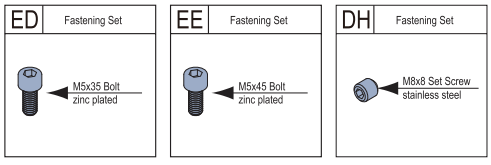

产品描述 Description	型材 Profile1	型材 Profile2	紧固组件 Fastening Set	重量 Mass (g)	订购编号 Part No.
L型材平门锁-30系列 L Lock for Swing Door- PG30	40X40L	30X30	1XDH+2XED	294	G. 12. 30. 30
L型材平门锁-40系列 L Lock for Swing Door- PG40	45X45L	40x40	1XDH+2XEE	297	G. 12. 40. 40

门插销

Door Latch

门插销用于将门固定，使门不会随意开。

The door latch is used to fix and lock the door to make sure the door cannot opened optionally.

材质：插销座-铝合金 插销杆-不锈钢

Material :Door Latch: aluminum Latch Rod: stainless steel.

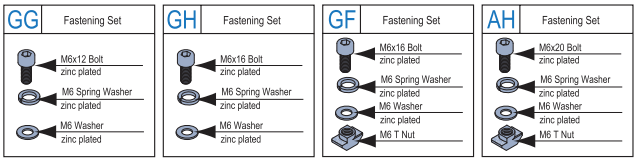

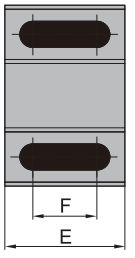

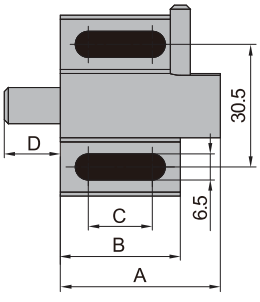

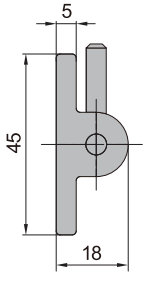

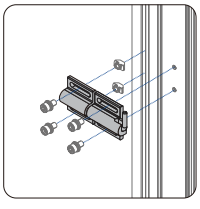

产品描述 Description	紧固组件 Fastening Set	A (mm)	B (mm)	C (mm)	D (mm)	E (mm)	F (mm)	重量 Mass (g)	订购编号 Part No.
门插销-30系列 Door Latch-PG30	2XGG+2XGF	40	30	16	14	30	16	97	MG. 02. 05. 01
门插销-40系列 Door Latch-PG40	2XGH+2XAH	50	40	26	17	40	26	129	MG. 02. 05. 02

平开门缓冲块

Buffer Block For Swing Door

材质：锌合金
Material: aluminum alloy.

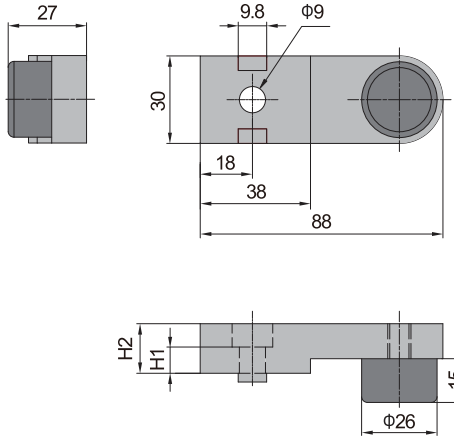

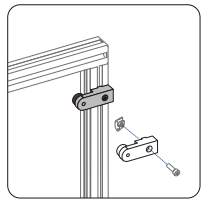

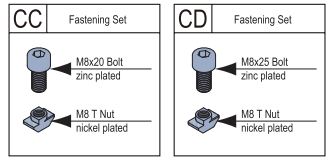

产品描述 Description	H1(mm)	H2(mm)	紧固组件 Fastening Set	重量 Mass (g)	订购编号 Part No.
平开门缓冲块-30系列 Buffer Block for Swing Door-PG30	9	17	1XCC	112	MG.02.06.01
平开门缓冲块-40系列 Buffer Block for Swing Door-PG40	14	22	1XCD	121	MG.02.06.02

门吸
Doormagnet

门吸在门关闭时起固定功能，并有吸附作用，使门不会随意开关。
Doormagnet has the function of absorption and fixation which cannot make the door opened optionally.
材质：门吸-不锈钢 连接件-碳钢镀锌
Material: Doormangnet-stainless steel Connector-zinc plated steel.

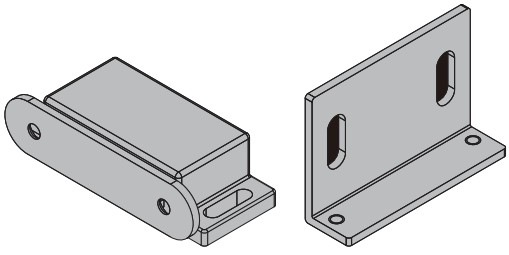

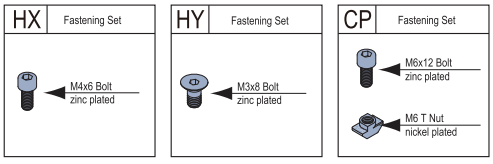

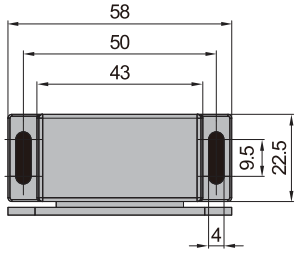

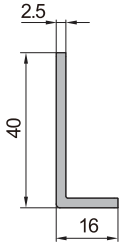

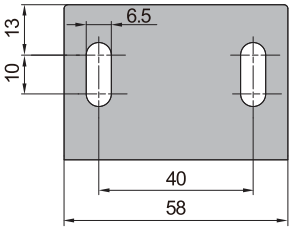

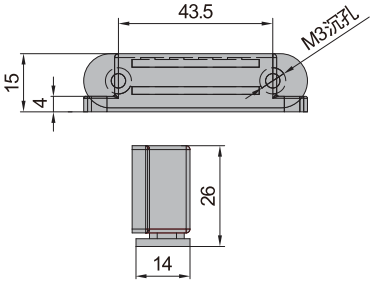

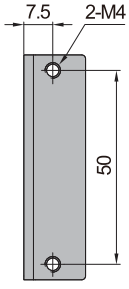

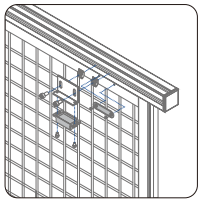

产品描述 Description	紧固组件 Fastening Set	重量 Mass (g)	订购编号 Part No.
门吸（单个供货） Doormagnet(pcs)		61	MG.02.07.01
门吸（成套供货） Doormagnet(set)	2XHX+2XHY+2XCP	133	MG.02.07.02

平开门锁

Lock for Swing Door

材质：锁体-不锈钢 锁卡槽-铝合金
Material and Color: Lock Body: stainless steel Lock Slot: aluminum

锁体
Lock Body

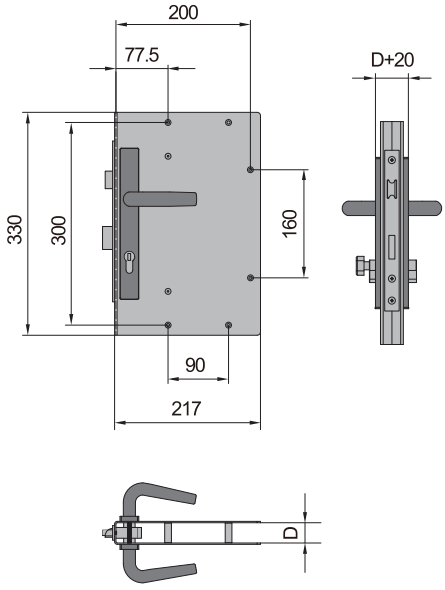

锁卡槽
Lock Slot

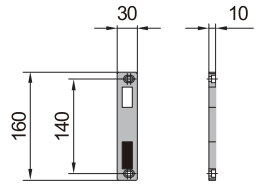

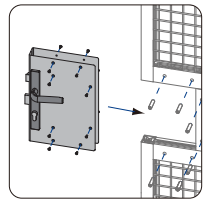

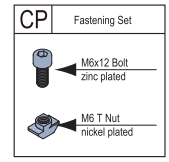

产品描述 Description	D (mm)	紧固组件 Fastening Set	重量 Mass (g)	订购编号 Part No.
平开门锁-30 Lock for Swing Door-PG30	30	2xCP	4100	MG.02.09.01
平开门锁-40 Lock for Swing Door-PG40	40	2xCP	4800	MG.02.09.02

防护单元推拉门-C
Sliding Door for Protective Grille Unit-C

01 编织网40x40 丝径Ø4
40x40 woven mesh Ø4 diameter

02 4mm 透明亚克力板
4mm transparent acrylic plate

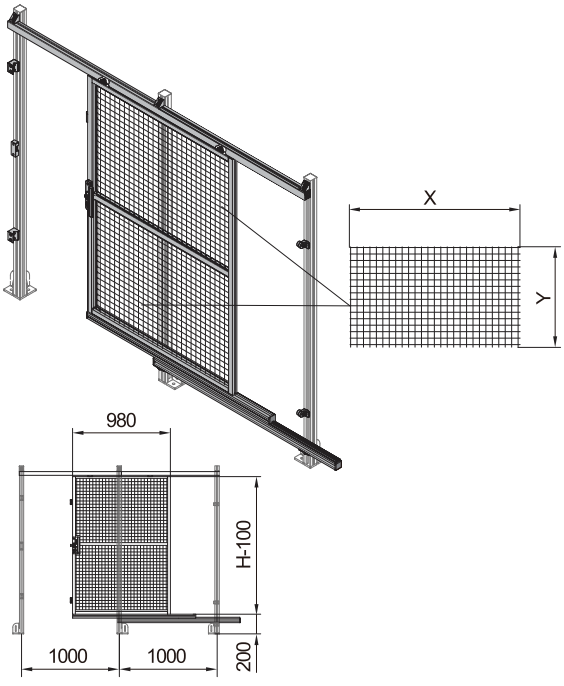

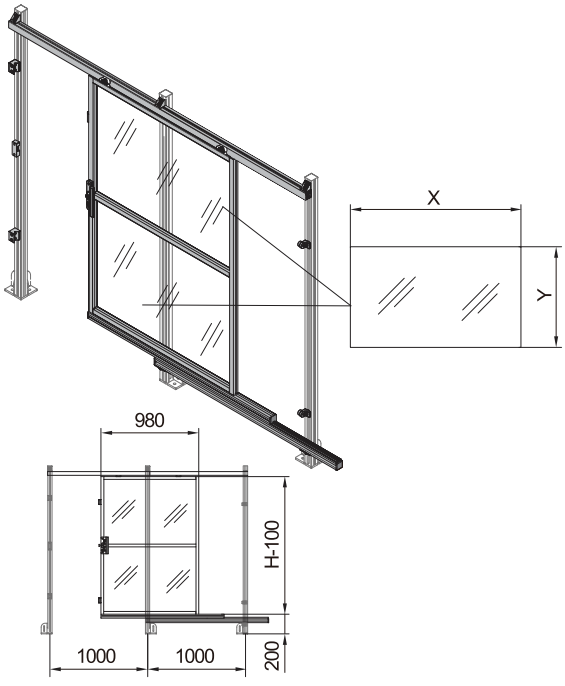

产品描述 Description	H (mm)	X (mm)	Y (mm)	重量(kg) Mass	订购编号（右开） Part No. (R)	订购编号（左开） Part No. (L)
防护单元-30系列-01 Protective Grille Unit-PG30-01	1400	970	643	21.2	PU.301400.01.C.R	PU.301400.01.C.L
	1800	970	843	24	PU.301800.01.C.R	PU.301800.01.C.L
防护单元-30系列-02 Protective Grille Unit-PG30-02	1400	968	639	21.6	PU.301400.02.C.R	PU.301400.02.C.L
	1800	968	839	23.8	PU.301800.02.C.R	PU.301800.02.C.L
防护单元-40系列-01 Protective Grille Unit-PG40-01	1400	950	630	24.7	PU.401400.01.C.R	PU.401400.01.C.L
	1800	950	830	27.8	PU.401800.01.C.R	PU.401800.01.C.L
防护单元-40系列-02 Protective Grille Unit-PG40-02	1400	948	628	23	PU.401400.02.C.R	PU.401400.02.C.L
	1800	948	828	27.7	PU.401800.02.C.R	PU.401800.02.C.L

订购编号解析/Item Number Reference:

标准颜色喷塑色号：

现订购编号默认焊接网喷塑颜色为灰色 (RAL9006)，如需黑色 (RAL9005) 或黄色 (RAL1018) 等其他颜色，需在现订购编号后追加色号。
The part number is for weld mesh wire in the default configuration, please specify with RAL Code if other is required, such as RAL9005 for black, RAL 1018 for yellow.

EX:PU.401400.01.C.R-RAL9005

喷塑色号
RAL Code Number

订购编号
Part No.

配套组件（需单独订购）
Associated kits（To be ordered separately):

立柱单元
Strut Elements - - - - - - - Page 14-19

压铸角铝
Die Casr Bracket - - - - - - - Page 34

推拉门组件
Components for Sliding Door

推拉门组件一般由（如图所示）01、02、03、04、05、06、07七部分组成。
Sliding door are normally composed of 01、02、 03、04、05、06 and 07 as shown in the below figure.

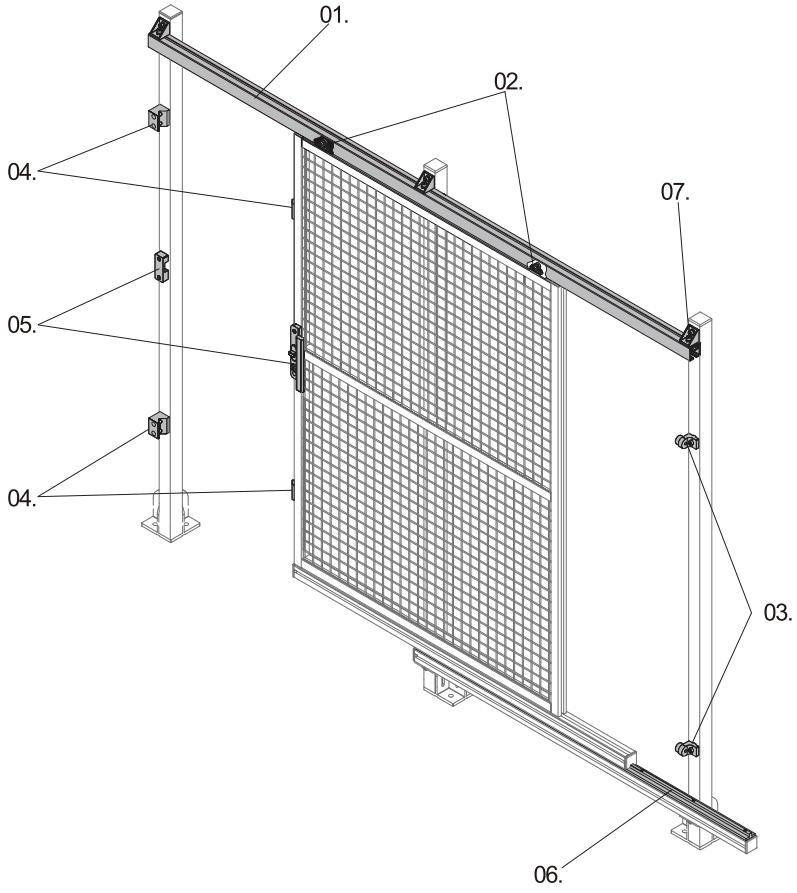

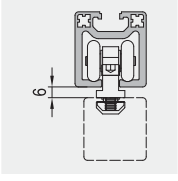

01. 滑道型材
Profile Rails

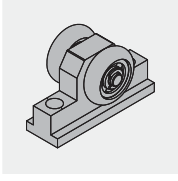

02. 滑轮组
Carriage

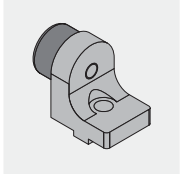

03. 缓冲块
Buffer Block

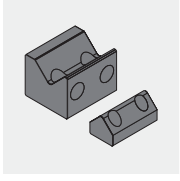

04. 导向块
Guide Block

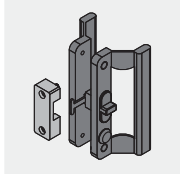

05. 推拉门锁
Lock for Sliding door

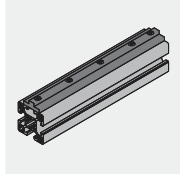

06. 摩擦条组
Friction Strip
Componen

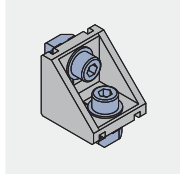

07. 压铸角铝
Die Cast Bracket

滑道型材
Profile Rail

材质：6063-T5
Material:6063-T5

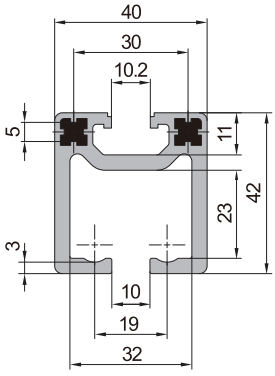

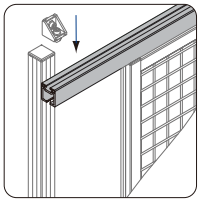

产品描述 Description	惯性矩Ix(cm^4) Moment of Inertia	惯性矩Iy(cm^4) Moment of Inertia	弯矩Wx(cm^3) Moment of Resistance	弯矩Wy(cm^3) Moment of Resistance	重量 (kg/m) Mass	订购编号 Part No.
滑道型材 Profile Rail	12.7	10.6	6.4	5.1	1.6	PU.42.40.01

推拉门滑轮组
Pulley Block for Sliding Door

材质：铝合金
Material:aluninum alloy

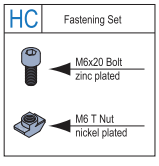

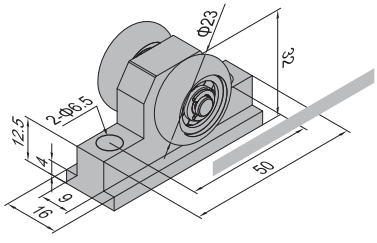

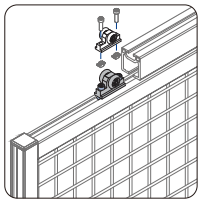

产品描述 Description	紧固组件 Fastening Set	重量 Mass (g)	订购编号 Part No.
推拉门滑轮组-30系列 Pulley Block for Sliding Door-PG30	2xHC	70	MG.02.10.01
推拉门滑轮组-40系列 Pulley Block for Sliding Door-PG40	2xHC	70	MG.02.10.02

推拉门缓冲块
Buffer Block for Sliding Door

材质：铝合金
Material:aluminum alloy

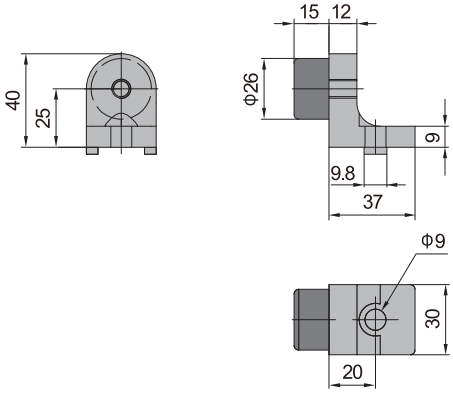

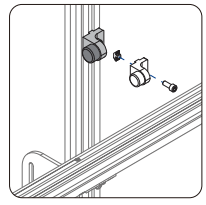

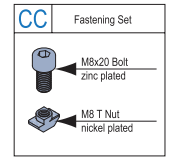

产品描述 Description	紧固组件 Fastening Set	重量 Mass (g)	订购编号 Part No.
推拉门缓冲块 Buffer Block for Sliding Door	1xCC	64	MG.02.11.01

推拉门导向块
Guide Block for Sliding Door

材质：POM
Material:POM

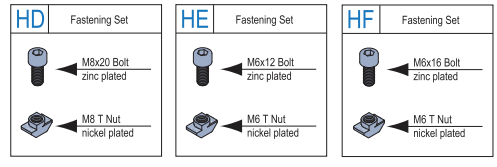

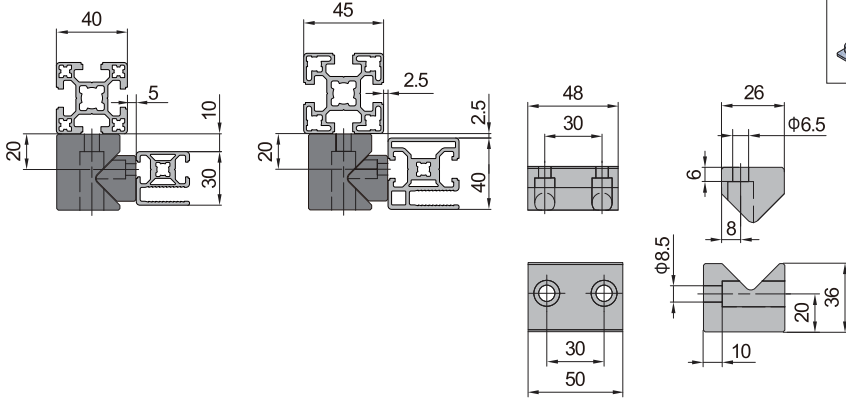

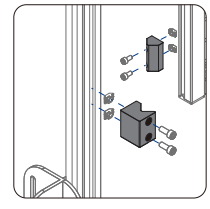

产品描述 Description	紧固组件 Fastening Set	重量 Mass (g)	订购编号 Part No.
推拉门导向块-30系列 Guide Block for Sliding Door-PG30	2xHD+2xHE	151	MG.02.12.01
推拉门导向块-40系列 Guide Block for Sliding Door-PG40	2xHD+2xHF	157	MG.02.12.02

推拉门锁

Lock for Sliding Door

材质：锁体-碳钢黑色电泳 锁卡槽-铝合金
Material:Lock Body: steel, black electrophoresis
Lock Slot: aluminum

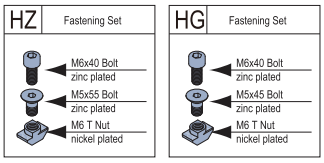

锁体
Lock Body

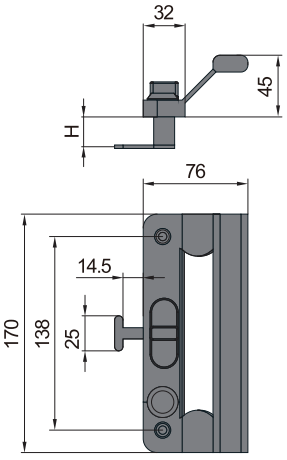

锁卡槽
Lock Slot

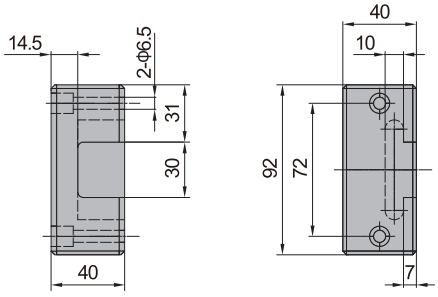

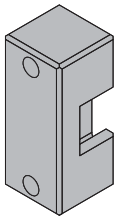

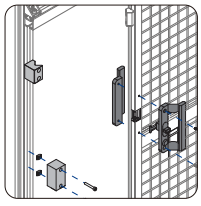

产品描述 Description	H (mm)	紧固组件 Fastening Set	重量 Mass (g)	订购编号 Part No.
推拉门锁-防护单元-30系列 Lock for Sliding Door of Protective Grille Unit-PG30	18	2xHG	956	MG.02.13.01
推拉门锁-防护单元-40系列 Lock for Sliding Door of Protective Grille Unit-PG40	20	2xHZ	960	MG.02.13.02

标注锁为右开门用，如需左开门，请在订货时注明
The lock showm above is used on right open door, please apecify if the lock is to be used on left open door

摩擦条组
Friction Strip Components

摩擦条组用于推拉门下侧导向，使推拉门滑动更顺滑。
The friction strip enable economical and low wear guides for manual sliding doors.
材质：高分子聚乙烯
Material: UHMW PE

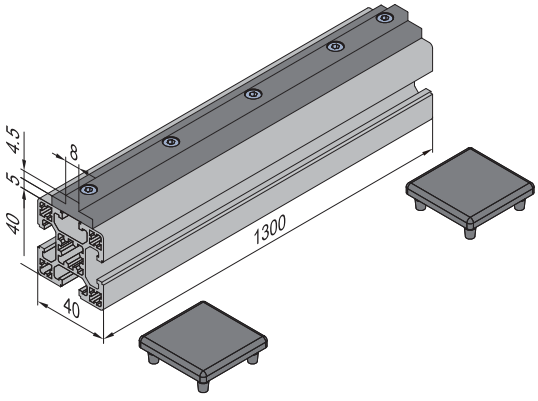

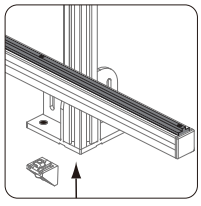

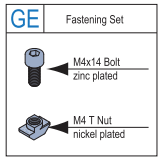

产品描述 Description	紧固组件 Fastening Set	重量 Mass (g)	订购编号 Part No.
摩擦条组（成套供货） Friction Strip Components(set)	5xGE	21	MG.02.14.01.ST

压铸角铝
Die Cast Bracket

压铸角铝用于连接滑道型材及摩擦条组时，需一面去槽牙。
Die cast used to connect profile rail with friction strip.
材质：压铸铝合金
Material:Die cast aluminium.

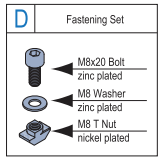

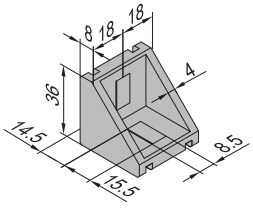

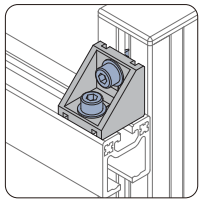

产品描述 Description	紧固组件 Fastening Set	重量 Mass (g)	订购编号 Part No.
压铸角铝-40系列-40x40(成套供货D) Die cast bracket-PG40-40x40(setD)	2xD	92	G.02.40.4040.STD

闭门器

Door Shutter

闭门器用于平开门上，可实现自动关门

Door shutter is used on swing door and it makes door closed automatically.

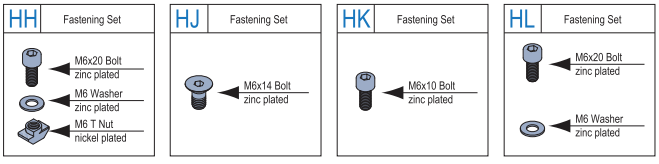

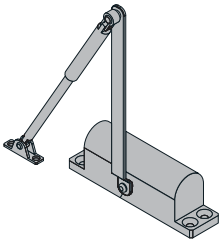

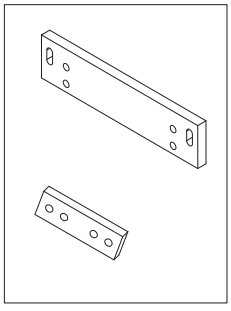

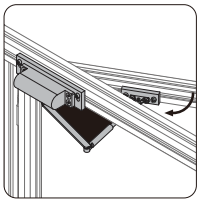

产品描述 Description	紧固组件 Fastening Set	订购编号 Part No.
闭门器组-防护单元 Door Shutter for Protective Grille Unit	2xHH+4xHJ+2xHK+2xHL	MG.02.16.01.ST

防护单元平开门使用闭门器时门上型材需加工M6X15螺纹孔2个
Strut profile used on swing door con structed with meshes need to be tapped with 2 pcs of M6X15 screw when using door shutter.

Load Capacity of Machine Guard(PG40)
机械防护的负载能力（40系列）

防护型材的特殊夹紧结构设计使整个防护围栏具有更高的负载能力。在承受一定的负载时防护网会产生变形，当撤掉负载后防护网会自动弹到初始状态，以下数据为实际测试得出，Fmax为防护围栏可承受的最大载荷。

The special clamping structure design of the protectve profile makes the whole protective fence have higher load capacity.The net will be deformed under a certain load, and the net will automatically bounce to the initial state when the load is removed. The following date are the maximum load that the,Fmax can bear for the protective fence.

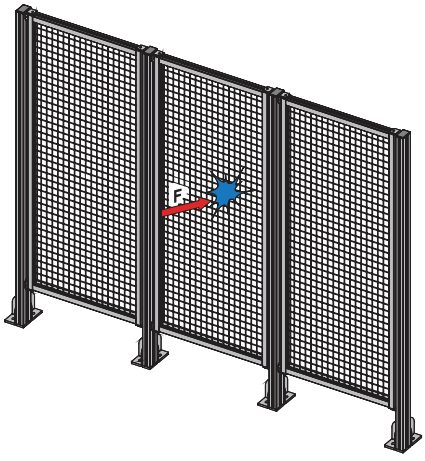

☞PG 1-08	H(mm)	B(mm)	Fmax(N)
PU.40.1800.0420.A.01	1800	420	1500
PU.40.1800.0670.A.01	1800	670	1000
PU.40.1800.0920.A.01	1800	920	800

立柱单元的负载能力（40系列）
Load Capacity of Strut Element(PG40)

当外力作用于紧固在地面上的机械防护系统立柱单元时，型材将产生变形，测试后变形量如下：

When the external force acts on the column element of the mechanical protection system fastened on the ground, the deformation of the profile will occur. After the test, the deformation amount is as follows:

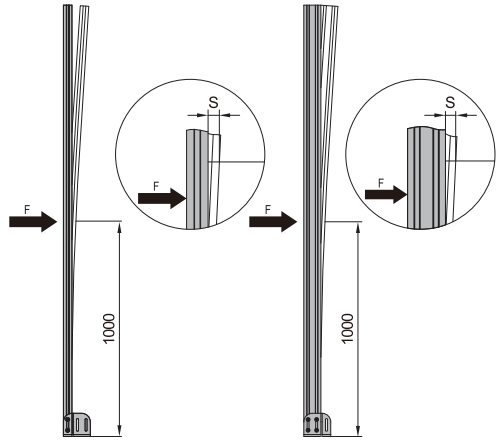

	F(N)	100	150	300	450	600
S(mm)	45x45	6	10	14	23	32
S(mm)	45x90	3	4.5	7.5	13.5	20

夹板弹片安装
Assembly of spring clamping nut

安装方法
Assembly:

1.预装框架。

1. Preassembly the frame.

2. 将夹板弹片安装在板材上，在每一个角安装一个夹板弹片，以防板材的串动。

2. Place spring clamping nut on panel.One element in each corner prevents the panels from rattling.

3.将安装过夹板弹片的板材安装在预装好的框架上。

3.Insert panel in the preassembled frame.

4.紧固框架。

4.Fasten the frame.

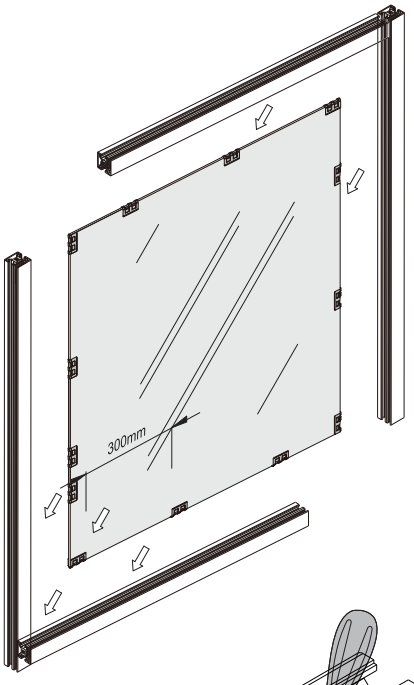

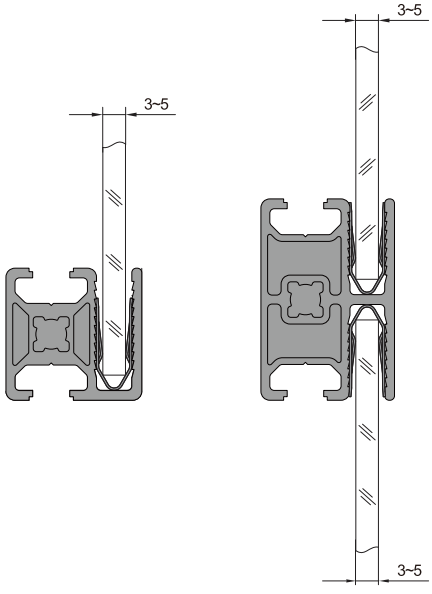

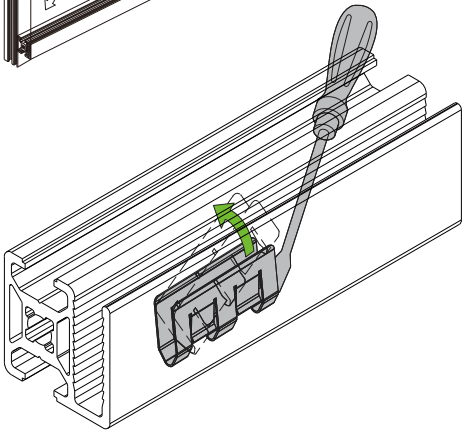

拆装方法
Disasembly:

1.拆装框架。

1. Disassemble the frame.

2. 移除板材。

2. Remove panel.

3.使用螺丝刀移除留在型材中的夹板弹片。

3.Use a screwdriver to remove the clip sheet remaining in the profile.

防护网单元

Assembly of Protective Frames

1.使用防护网型材搭接“T型”（以4040防护网型材为例）依图示尺寸预装螺栓连接件，如图A。

1.Use protective mesh profiles to lap “T”(take 4040 mesh profiles as an example) to pre-install bolted connections in graphic dimensions, as shown in figure A.

2.将编织网或预装过夹板弹片的板材装入框架，如图B。

2.Framing woven mesh or plates preloaded with splint shrapnel, as shown in figure B.

3. 将螺栓连接件滑入侧面防护网型材槽口中，将螺栓连接件装入T型框架上，但不锁紧，如图C。

3.Slied the bolted connector into the side shield mesh slot and place the bolted connector on the T-frame without locking it as shown in figureC.

4. 将预装过螺栓连接件的上下两侧型材装入框架中，如图D。

4. Load the upper and lower profiles of the pre-loaded bolted connector into the frame, as shown in figure D.

5. 锁紧所有螺栓连接件。

5.Load all bolted connections.

6. 防护网单元侧边型材需要打工艺孔。

6. The side profiles of the prtective net unit needs to work as an art hole.

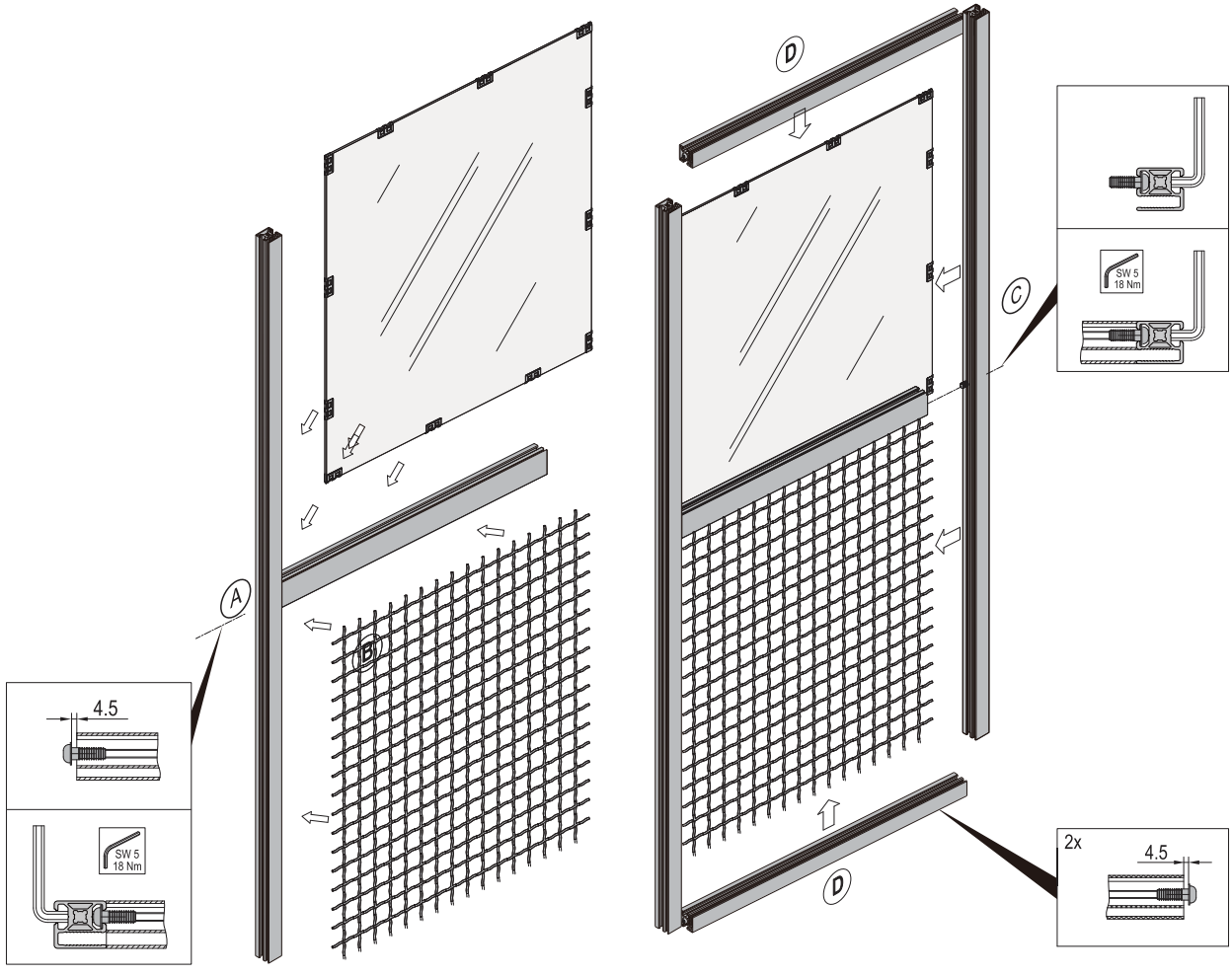

立柱单元安装
Assembly of Strut Element

在安装机械防护系统立柱单元时，使用工具在地面上画出一条直线后，按照间距要求画出立柱单元的定位位置，再进行定位固定安装。
When installing the post unit of the mechanical protection system, after drawing a straight line on the ground with the tool, the positioning position of the post unit is drawn according to the requirements of the spacing, and then positioning and fixing installation is carried out.

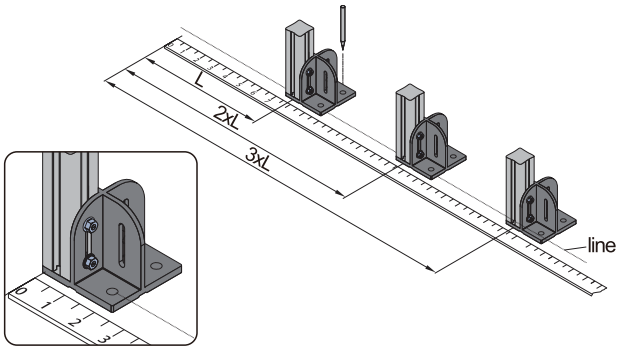

如果安装地面不是水平面时，可以通过增加垫片调整立柱单元垂直。
If the ground is not horizontal, you can adjust the column element vertical by adding a gasket.

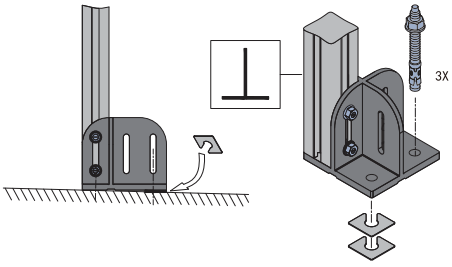

防护网单元安装
Assembly of Protective Grille Unit

1. 使用工具定位安装连接组件，并锁紧螺栓A。
1. Mount the connecting elements by positioning tool, and then fasten the screwA.
2. 将防护单元安装到连接组件上，安装螺栓B并锁紧。
2. Attach the connecting elements to protective grille unit, mount the screwB.
3. 如图所示安装防护单元下方的连接组件，并锁紧螺栓C。
3. Attach the lower connecting elements to protective grille unit, and then fasten screwC.
4. 将螺栓D安装到防护单元上，并锁紧，完成安装。
4. Mount the screwD on the protective grille unit, and then fasten the screw to finish assembly work.

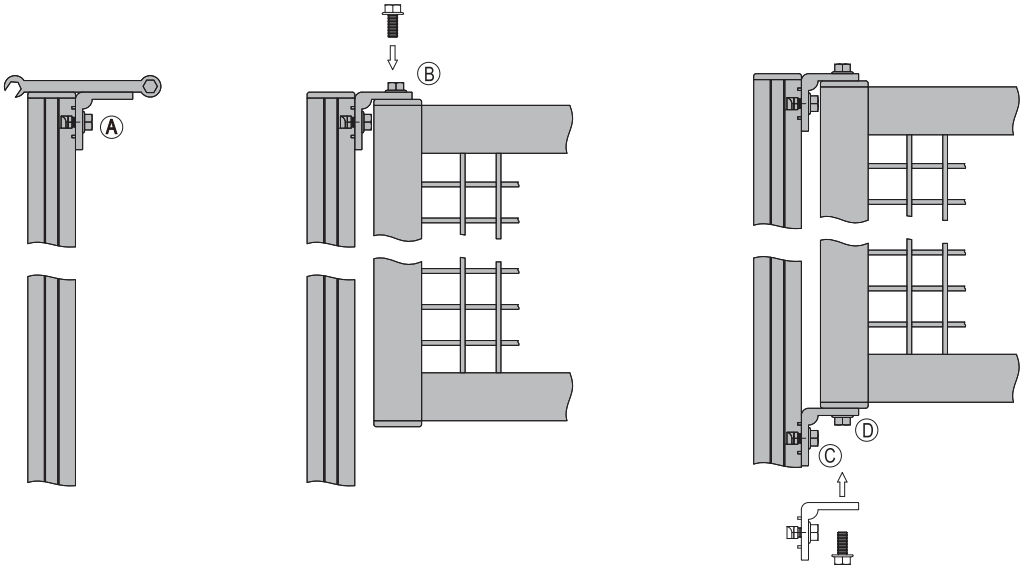

扫一扫，有更多精彩

辽宁禧易珈工业组装技术有限公司

电话：0417-3686668
传真：0417-3686668
网址：www.xi-easy.com 邮箱：sales@xi-easy.com
地址：中国（辽宁）自由贸易试验区营口市西市区渤海大街西96号

客户成功，我们才能成功。长期战略合作关系带来的独特洞见和实力，让我们能够创造卓越的客户体验与解决方案。

We win when our customers win. Our long-term strategic relationships provide unique insights and the ability to deliver exceptional customer experiences and solutions.